Wall mounted fan coil

Description

Vernal has developed a hydronic wall mounted fan coil unit with extra large coil face area in a compact body frame, so that greater capacity and efficiency are achieved even in small body frame. Vernal wall mounted fan coil unit looks small and elegant when installed on the wall.

The whole Vernal front panel has only 2 screws to hold it to the main unit body. The front panel, discharge flaps, deflection vanes can be removed by hands for cleaning.

Features:

Vernal wall mounted fan coil unit consists of 10 models with a wide range of capacities:

Air Flow Range: 340 - 2380 m3/hr
Cooling Capacity: 2.0 - 12.0 kW
Heating Capacity: 3.0 - 18.0 kW

Product Description

Wall mounted fan coils, suitable for chilled or hot water AC system	
Air Flow	340-2380m³/h(220-1400CFM)
Cooling Capacity	2.0-12.0KW

Dimensions

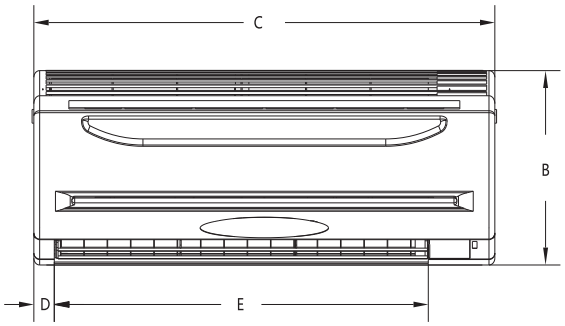

	WMF-020CA WMF-030CA	WMF-040CA WMF-050CA WMF-060CA	WMF-080CA WMF-090CA	WMF-100CA WMF-120CA WMF-140CA
A	213	240	265	335
B	280	325	335	370
C	790	1030	1165	1530
D	35	42	42	44
E	638	900	1038	1350
F	105	100	105	160

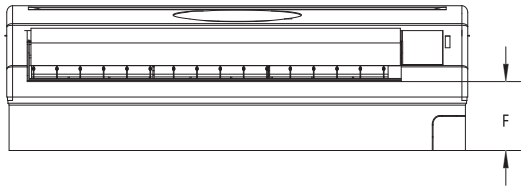

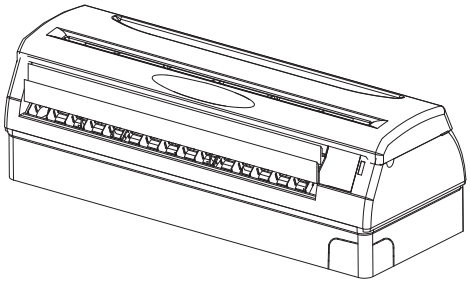

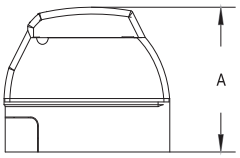

Standard Specification:

	Aesthetic panel with digital display screen
Air Filter	Synthetic removable and washable
Heat Exchanger	Copper tube and hydrophilic AL fins, with air release valve
Fan & Motor	Cross flow fan, 3 speed motor
Control System	Main board, transformer, built-in electric control❄
Electric Heater(Optional)	Automatic or manual overload protection❄

❄: Optional

Technical Parameters

				WMF-020CA	WMF-030CA	WMF-040CA	WMF-050CA	WMF-060CA	WMF-080CA	WMF-090CA	WMF-100CA	WMF-120CA	WMF-140CA
Cooling	Cooling Capacity	H	KW	2.0	3.0	3.8	4.8	5.5	7.0	7.5	9.0	11.0	12.0
		M		1.5	2.5	3.5	4.3	4.5	5.3	6.5	7.3	8.9	10.5
		L		1.3	2.0	2.9	3.7	4.1	4.2	5.0	5.7	7.6	9.0
	Water Flow Rate		L/H	340	516	655	825	945	1200	1290	1550	1890	2065
	Water Pressure Drop		kPa	22	37	22	27	33	49	62	45	50	55
Heating	Heating Capacity	H	KW	3.0	4.5	5.7	7.2	8.2	10.5	11.5	13.5	16.5	18.0
		M		2.3	3.7	5.1	6.5	6.7	7.7	10.0	11.0	13.0	15.4
		L		2.0	3.0	4.3	5.5	6.1	6.4	7.7	8.6	11.0	13.5
Blower	Type			Tangential									
	Dim.		mm	Φ100x630	Φ100x630	Φ107x816	Φ107x816	Φ107x816	Φ121x930	Φ121x930	Φ121x610	Φ121x610	Φ121x610
	Qty.			1	1	1	1	1	1	1	2	2	2
Electric Parameter	Power Supply		V/Ph/Hz	220 / 1 / 50									
	Input Power		W	20	25	55	65	65	100	100	150	182	182
	Current		A	0.091	0.11	0.25	0.29	0.29	0.45	0.45	0.67	0.82	0.82
Air Flow		H		340	550	680	850	1020	1360	1530	1700	2040	2380
		M	m3/h	270	440	600	750	820	1000	1300	1360	1600	2000
		L		230	360	500	660	740	800	1000	1050	1360	1700
Sound Pressure			dB(A)	36	37	43	45	48	50	52	53	56	57
Electric HeaterOptional			kW	0.8	0.8	1.0	1.0	1.0	1.0	1.0	1.5	1.5	1.5
			A	3.6	3.6	4.6	4.6	4.6	4.6	4.6	6.8	6.8	6.8
Control Mode				Wired or Wireless controller									
Unit Dimensions(WxHxD)			mm	790x283x208		1030x325x240			1180x340x265		1530x370x330		
Net Weight			kg	10		13			16		30		
Water Connection	Connection Mode			Female thread unit									
	In		in	G1/2"							G3/4"		
	Out		in	G1/2"							G3/4"		

Test Condition:

Cooling: inlet dry ball temp. 27°C, wet ball 19.5°C, inlet water temp.7°C,outlet water temp 12°C

Heating: inlet dry ball temp. 21°C, inlet water temp. 60 °C, same water flow as cooling