<<< BACK INDEX

Hydronic terminals

Hydronic terminals

Hydronic terminals

a-LIFE2 0102 - 1004

Fan-coil for professional applications, with cabinet or built-in version 1,50-7,50 kW

The new a-LIFE2 fancoil has been specifically developed to be adapted to every ambient thanks to its modern and minimal design which is result of the full experience and Climaveneta's know-how on this range of products.
Centrifugal fan with 6 speed via auto-transformer. Thanks to the different versions, with cabinet or buit in, low air intake or front air intake, vertical or horizontal installation, it results very easy to find the perfect solution any time.

Version

DLMV	version with cabinet, low air intake, vertical installation
DLMO	version with cabinet, low air intake, horizontal installation
DFMV	version with cabinet, front air intake, vertical installation
DFMO	version with cabinet, front air intake, horizontal installation
DLIV	built-in version, low air intake, vertical installation.
DLIO	built-in version, low air intake, horizontal installation
DFIV	built-in version, front air intake, vertical installation
DFIO	built-in version, front air intake, horizontal installation

Features

Centrifugal Fan with double air inlet, to ensure the best performances with the best acoustic emissions.
Coils with aluminium fins and cooper pipes.
Configurations for 2 and 4 pipe Systems.
Left-hand water connections, easy convertible into right-hand, by simply turning the coil
6-speed autotransformer;
Air filter on all models.
Automatically closing flap to cover and protect electric controls from dripping water (in conformity with directive 60335-2-40).
Auxiliary drain pan with thermal insulation for all Horizontal versions, made of galvanized steel.
Plastic drain pan for all Vertical versions.

Accessory

- Hot water coil kit
- Kit Bus Adapter for BMS
- Kit RS485 - interface for Building Management System
- Kit Gateway interface for MyHome Bticino System
- Interface SPB Kit
- Kit control board to manage 0-10V or 3 points modulating valve unit
- Main and additional coil valve unit ON/OFF, PWM, 0-10 V, 3 points 2-way or 3-way
- Kit LIFE2 BOX
- Plenum kit with round, streight or 90° air ducts.
- Air intake grille kit with version cover
- Horizontal and vertical fan coil auxiliary tray
- Electric heaters

Commands

PS plug-in/PSW wall mounted
Fan speed slider, mode slider (OFF/summer/winter). ON/OFF valve unit control (summer/winter for 2 pipes installation), ON/OFF second valve unit control (winter for 4 pipes installation). Remote water temperature probe.
MT plug-in/MTW wall mounted
Fan speed slider, mode slider (OFF/summer/winter). Thermostat with set point regulation. ON/OFF valve unit control (summer/winter for 2 pipes installation), ON/OFF second valve unit control (winter for 4 pipes installation). Room temperature probe. Remote water temperature probe.
AT plug-in/ATW wall mounted
Mode button (OFF/summer/winter/AUTO), fan speed button (Max/Med/Min/AUTO). Thermostat with set point regulation. ON/OFF valve unit control (summer/winter for 2 and 4 pipes installation). Control of traditional or PWM modulating valve units. Room temperature probe and water temperature probe. Digital input configurable as: window contact, economy, heating or cooling remote changeover, periodic ventilation. Configuration dip switch. TTL serial port with Modbus protocol for installation in BMS.
EK plug-in control /EKW wall mounted control
User interface for selection of functioning mode (OFF/summer/winter/AUTO), fan speed (Max/Med/Min/AUTO), temperature set. Control of main and additional coil valve unit (summer/winter - 2 and 4 pipes installation) . Management of traditional ON/OFF valve unit or modulating valve unit 0-10V or 3 points . Air and water temperature probe. Multifunction digital input configurable by user. Configuration dip switch.
Modbus protocol for installation in BMS (e.g. Idrorelax system by Climaveneta). Installation and management of Master-Slave system up to 8 LIFE fan coil units.
Easy control installation thanks to 2 wires connection.
iK control with LCD screen
Interface with LCD screen with user-friendly icons. Control kit for universal installation: wall-mounted as well as plug-in. Selection of functioning mode (OFF/summer/winter/AUTO), fan speed (Max/Med/Min/AUTO), temperature set. Control iK could function manually or with weekly timer regulation configurable by the customer.
Control of main coil valve unit (summer/winter - 2 pipes) and additional coil (winter - 4 pipes). Management of traditional ON/OFF valve unit or modulating valve unit 0-10V or 3 points (supply 230 VAC or 24V) .
Parameters configurable directly by user. Modbus protocol for installation in Building Management System (e.g. Idrorelax system by Climaveneta). Installation and management of Master-Slave system up to 8 LIFE fan coil units.
Easy control installation thanks to 2 wires connection through HB power board

a-LIFE2 / DFI - DLI			0102	0202	0302	0402	0502	0602	0702	0802	0902	1002
ELECTRICAL DATA												
Power supply		V/ph/Hz	230/1/50	230/1/50	230/1/50	230/1/50	230/1/50	230/1/50	230/1/50	230/1/50	230/1/50	230/1/50
Max absorbd power		W	55	55	85	85	75	75	145	145	175	175
2 PIPES SYSTEM CONFIGURATION												
MAX SPEED												
Air flow		m³/h	300	360	520	590	660	815	890	980	1140	1310
Total capacity in cooling mode	(1)	kW	1,50	2,00	2,85	3,40	3,80	4,40	5,15	5,70	6,15	7,50
Sensible capacity in cooling mode	(1)	kW	1,24	1,59	2,22	2,61	2,95	3,52	3,99	4,38	4,66	5,81
Max water flow	(1)	m³/h	0,258	0,344	0,491	0,585	0,654	0,757	0,887	0,981	1,059	1,291
Mad pressure drop	(1)	kPa	9,0	12,7	30,8	36,1	12,6	17,2	24,2	26,9	32,9	46,8
Total capacity in heating mode	(2)	kW	2,17	2,82	3,86	4,40	5,17	6,06	6,94	7,74	8,09	10,1
Water flow in heating	(2)	m³/h	0,258	0,345	0,489	0,584	0,654	0,758	0,878	0,979	1,060	1,288
Pressure drop in heating	(2)	kPa	7,6	10,9	26,0	34,5	10,7	14,6	20,3	23,3	29,1	40,9
Noise Pressure	(3)	dB(A)	39	45	42	47	45	50	47	50	48	55
Noise Power	(4)	dB(A)	48	54	51	56	54	59	56	59	57	64
MED SPEED												
Air flow		m³/h	210	290	410	500	560	670	780	910	1010	1180
Total capacity in cooling mode	(1)	kW	1,16	1,74	2,33	2,85	3,08	3,75	4,50	5,06	5,41	6,62
Sensible capacity in cooling mode	(1)	kW	0,90	1,31	1,77	2,22	2,43	2,95	3,49	3,99	4,16	5,16
Max water flow	(1)	m³/h	0,200	0,300	0,401	0,491	0,530	0,646	0,775	0,871	0,931	1,140
Mad pressure drop	(1)	kPa	5,4	9,6	20,5	28,0	8,2	12,4	18,5	21,2	25,5	36,5
Total capacity in heating mode	(2)	kW	1,62	2,32	3,09	3,84	4,18	5,14	6,15	6,92	7,16	8,89
Water flow in heating	(2)	m³/h	0,200	0,300	0,400	0,487	0,529	0,650	0,779	0,875	0,927	1,138
Pressure drop in heating	(2)	kPa	4,7	8,3	17,7	24,9	7,2	10,9	16,2	18,8	22,8	32,5
Noise Pressure	(3)	dB(A)	31	39	37	42	39	45	44	47	45	51
Noise Power	(4)	dB(A)	40	48	46	51	48	54	53	56	54	60
MIN SPEED												
Air flow		m³/h	180	270	350	380	500	550	640	760	790	920
Total capacity in cooling mode	(1)	kW	1,00	1,49	2,07	2,31	2,85	3,02	4,06	4,50	4,71	5,40
Sensible capacity in cooling mode	(1)	kW	0,78	1,18	1,59	1,75	2,22	2,39	3,00	3,44	3,59	4,14
Max water flow	(1)	m³/h	0,172	0,257	0,356	0,398	0,491	0,520	0,699	0,775	0,811	0,930
Mad pressure drop	(1)	kPa	4,0	7,0	16,2	20,7	7,0	8,0	15,0	16,8	19,4	24,3
Total capacity in heating mode	(2)	kW	1,40	2,08	2,80	3,07	3,82	4,15	5,42	6,12	6,29	7,13
Water flow in heating	(2)	m³/h	0,173	0,257	0,355	0,398	0,489	0,519	0,701	0,775	0,814	0,923
Pressure drop in heating	(2)	kPa	3,5	6,2	14,1	17,3	6,2	7,1	13,3	15,0	17,9	22,1
Noise Pressure	(3)	dB(A)	28	37	36	37	37	39	41	44	41	45
Noise Power	(4)	dB(A)	37	46	45	46	46	48	50	53	50	54
SIZE AND WEIGHT												
A	(5)	mm	545	545	745	745	945	945	1145	1145	1345	1345
B	(5)	mm	215	215	215	215	215	215	215	215	215	215
H	(5)	mm	450	450	450	450	450	450	450	450	450	450
Operating weight	(5)	kg	11	12	14	15	20	21	23	25	27	29

Notes:
1 Room temperature 27°C d.b./19°C w.b.; Chilled water (in/out) 7/12°C
2 Room temperature 20°C d.b.; Hot water (in/out) 50/* °C (with identical flow note1)
3 Sound pressure in semianechoic room at 1 (m.) from fan front and 1 (m.) from the ground
4 Sound power on the basis of measurements made in compliance with Eurovent 8/2.
5 Unit in standard configuration/execution, without optional accessories.

a-LIFE2 / DFM - DLM			0102	0202	0302	0402	0502	0602	0702	0802	0902	1002
ELECTRICAL DATA												
Power supply		V/ph/Hz	230/1/50	230/1/50	230/1/50	230/1/50	230/1/50	230/1/50	230/1/50	230/1/50	230/1/50	230/1/50
Max absorbd power		W	55	55	85	85	75	75	145	145	175	175
2 PIPES SYSTEM CONFIGURATION												
MAX SPEED												
Air flow		m³/h	300	360	520	590	660	815	890	980	1140	1310
Total capacity in cooling mode	(1)	kW	1,50	2,00	2,85	3,40	3,80	4,40	5,15	5,70	6,15	7,50
Sensible capacity in cooling mode	(1)	kW	1,24	1,59	2,22	2,61	2,95	3,52	3,99	4,38	4,66	5,81
Max water flow	(1)	m³/h	0,258	0,344	0,491	0,585	0,654	0,757	0,887	0,981	1,059	1,291
Mad pressure drop	(1)	kPa	9,0	12,7	30,8	36,1	12,6	17,2	24,2	26,9	32,9	46,8
Total capacity in heating mode	(2)	kW	2,17	2,82	3,86	4,40	5,17	6,06	6,94	7,74	8,09	10,1
Water flow in heating	(2)	m³/h	0,258	0,345	0,489	0,584	0,654	0,758	0,878	0,979	1,060	1,288
Pressure drop in heating	(2)	kPa	7,6	10,9	26,0	34,5	10,7	14,6	20,3	23,3	29,1	40,9
Noise Pressure	(3)	dB(A)	39	45	42	47	45	50	47	50	48	55
Noise Power	(4)	dB(A)	48	54	51	56	54	59	56	59	57	64
MED SPEED												
Air flow		m³/h	210	290	410	500	560	670	780	910	1010	1180
Total capacity in cooling mode	(1)	kW	1,16	1,74	2,33	2,85	3,08	3,75	4,50	5,06	5,41	6,62
Sensible capacity in cooling mode	(1)	kW	0,90	1,31	1,77	2,22	2,43	2,95	3,49	3,99	4,16	5,16
Max water flow	(1)	m³/h	0,200	0,300	0,401	0,491	0,530	0,646	0,775	0,871	0,931	1,140
Mad pressure drop	(1)	kPa	5,4	9,6	20,5	28,0	8,2	12,4	18,5	21,2	25,5	36,5
Total capacity in heating mode	(2)	kW	1,62	2,32	3,09	3,84	4,18	5,14	6,15	6,92	7,16	8,89
Water flow in heating	(2)	m³/h	0,200	0,300	0,400	0,487	0,529	0,650	0,779	0,875	0,927	1,138
Pressure drop in heating	(2)	kPa	4,7	8,3	17,7	24,9	7,2	10,9	16,2	18,8	22,8	32,5
Noise Pressure	(3)	dB(A)	31	39	37	42	39	45	44	47	45	51
Noise Power	(4)	dB(A)	40	48	46	51	48	54	53	56	54	60
MIN SPEED												
Air flow		m³/h	180	270	350	380	500	550	640	760	790	920
Total capacity in cooling mode	(1)	kW	1,00	1,49	2,07	2,31	2,85	3,02	4,06	4,50	4,71	5,40
Sensible capacity in cooling mode	(1)	kW	0,78	1,18	1,59	1,75	2,22	2,39	3,00	3,44	3,59	4,14
Max water flow	(1)	m³/h	0,172	0,257	0,356	0,398	0,491	0,520	0,699	0,775	0,811	0,930
Mad pressure drop	(1)	kPa	4,0	7,0	16,2	20,7	7,0	8,0	15,0	16,8	19,4	24,3
Total capacity in heating mode	(2)	kW	1,40	2,08	2,80	3,07	3,82	4,15	5,42	6,12	6,29	7,13
Water flow in heating	(2)	m³/h	0,173	0,257	0,355	0,398	0,489	0,519	0,701	0,775	0,814	0,923
Pressure drop in heating	(2)	kPa	3,5	6,2	14,1	17,3	6,2	7,1	13,3	15,0	17,9	22,1
Noise Pressure	(3)	dB(A)	28	37	36	37	37	39	41	44	41	45
Noise Power	(4)	dB(A)	37	46	45	46	46	48	50	53	50	54
SIZE AND WEIGHT												
A	(5)	mm	922	922	1112	1112	1302	1302	1492	1492	1682	1682
B	(5)	mm	233	233	233	233	233	233	233	233	233	233
H	(5)	mm	499	499	499	499	499	499	499	499	499	499
Operating weight	(5)	kg	16	17	20	21	27	28	32	33	37	38

Notes:
1 Room temperature 27°C d.b./19°C w.b.; Chilled water (in/out) 7/12°C
2 Room temperature 20°C d.b.; Hot water (in/out) 50/* °C (with identical flow note1)
3 Sound pressure in semianechoic room at 1 (m.) from fan front and 1 (m.) from the ground
4 Sound power on the basis of measurements made in compliance with Eurovent 8/2.
5 Unit in standard configuration/execution, without optional accessories.

a-LIFE2 / DFI - DLI			0104	0204	0304	0404	0504	0604	0704	0804	0904	1004
ELECTRICAL DATA												
Power supply		V/ph/Hz	230/1/50	230/1/50	230/1/50	230/1/50	230/1/50	230/1/50	230/1/50	230/1/50	230/1/50	230/1/50
Max absorbd power		W	55	55	85	85	75	75	145	145	175	175
4 PIPES SYSTEM CONFIGURATION												
MAX SPEED												
Air flow		m³/h	300	360	520	590	660	815	890	980	1140	1310
Total capacity in cooling mode	(1)	kW	1,50	2,00	2,85	3,40	3,80	4,40	5,15	5,70	6,15	7,50
Sensible capacity in cooling mode	(1)	kW	1,24	1,59	2,22	2,61	2,95	3,52	3,99	4,38	4,66	5,81
Max water flow	(1)	m³/h	0,258	0,344	0,491	0,585	0,654	0,757	0,887	0,981	1,059	1,291
Mad pressure drop	(1)	kPa	9,0	12,7	30,8	36,1	12,6	17,2	24,2	26,9	32,9	46,8
Total capacity in heating mode	(2)	kW	1,25	1,67	2,31	2,76	3,34	3,87	4,36	4,82	5,18	6,32
Water flow in heating	(2)	m³/h	0,110	0,146	0,203	0,242	0,293	0,339	0,382	0,423	0,454	0,554
Pressure drop in heating	(2)	kPa	6,2	10,7	13,3	18,6	27,0	35,6	37,5	45,2	54,6	79,1
Noise Pressure	(3)	dB(A)	39	45	42	47	45	50	47	50	48	55
Noise Power	(4)	dB(A)	48	54	51	56	54	59	56	59	57	64
MED SPEED												
Air flow		m³/h	210	290	410	500	560	670	780	910	1010	1180
Total capacity in cooling mode	(1)	kW	1,16	1,74	2,33	2,85	3,08	3,75	4,50	5,06	5,41	6,62
Sensible capacity in cooling mode	(1)	kW	0,90	1,31	1,77	2,22	2,43	2,95	3,49	3,99	4,16	5,16
Max water flow	(1)	m³/h	0,200	0,300	0,401	0,491	0,530	0,646	0,775	0,871	0,931	1,140
Mad pressure drop	(1)	kPa	5,4	9,6	20,5	28,0	8,2	12,4	18,5	21,2	25,5	36,5
Total capacity in heating mode	(2)	kW	0,97	1,45	1,89	2,31	2,71	3,30	3,81	4,28	4,56	5,57
Water flow in heating	(2)	m³/h	0,085	0,127	0,166	0,203	0,238	0,289	0,334	0,375	0,400	0,488
Pressure drop in heating	(2)	kPa	3,9	8,2	9,1	13,3	18,3	26,4	29,2	36,3	43,1	62,5
Noise Pressure	(3)	dB(A)	31	39	37	42	39	45	44	47	45	51
Noise Power	(4)	dB(A)	40	48	46	51	48	54	53	56	54	60
MIN SPEED												
Air flow		m³/h	180	270	350	380	500	550	640	760	790	920
Total capacity in cooling mode	(1)	kW	1,00	1,49	2,07	2,31	2,85	3,02	4,06	4,50	4,71	5,40
Sensible capacity in cooling mode	(1)	kW	0,78	1,18	1,59	1,75	2,22	2,39	3,00	3,44	3,59	4,14
Max water flow	(1)	m³/h	0,172	0,257	0,356	0,398	0,491	0,520	0,699	0,775	0,811	0,930
Mad pressure drop	(1)	kPa	4,0	7,0	16,2	20,7	7,0	8,0	15,0	16,8	19,4	24,3
Total capacity in heating mode	(2)	kW	0,83	1,24	1,68	1,88	2,51	2,65	3,43	3,81	3,97	4,55
Water flow in heating	(2)	m³/h	0,073	0,109	0,147	0,165	0,220	0,232	0,301	0,334	0,348	0,399
Pressure drop in heating	(2)	kPa	2,9	6,1	7,2	9,0	15,8	17,5	24,0	29,2	33,3	42,9
Noise Pressure	(3)	dB(A)	28	37	36	37	37	39	41	44	41	45
Noise Power	(4)	dB(A)	37	46	45	46	46	48	50	53	50	54
SIZE AND WEIGHT												
A	(5)	mm	450	450	650	650	850	850	1050	1050	1250	1250
B	(5)	mm	215	215	215	215	215	215	215	215	215	215
H	(5)	mm	450	450	450	450	450	450	450	450	450	450
Operating weight	(5)	kg	12	12	14	15	21	22	24	25	28	29

Notes:

1 Room temperature 27°C d.b./19°C w.b., Chilled water (in/out) 7/12°C
2 Room temperature 20°C d.b., hot water (in/out) 70/60°C
3 Sound pressure in semianechoic room at 1 (m.) from fan front and 1 (m.) from the ground
4 Sound power on the basis of measurements made in compliance with Eurovent 8/2.
5 Unit in standard configuration/execution, without optional accessories.

a-LIFE2 / DFM - DLM			0104	0204	0304	0404	0504	0604	0704	0804	0904	1004
ELECTRICAL DATA												
Power supply		V/ph/Hz	230/1/50	230/1/50	230/1/50	230/1/50	230/1/50	230/1/50	230/1/50	230/1/50	230/1/50	230/1/50
Max absorbd power		W	55	55	85	85	75	75	145	145	175	175
4 PIPES SYSTEM CONFIGURATION												
MAX SPEED												
Air flow		m³/h	300	360	520	590	660	815	890	980	1140	1310
Total capacity in cooling mode	(1)	kW	1,50	2,00	2,85	3,40	3,80	4,40	5,15	5,70	6,15	7,50
Sensible capacity in cooling mode	(1)	kW	1,24	1,59	2,22	2,61	2,95	3,52	3,99	4,38	4,66	5,81
Max water flow	(1)	m³/h	0,258	0,344	0,491	0,585	0,654	0,757	0,887	0,981	1,059	1,291
Mad pressure drop	(1)	kPa	9,0	12,7	30,8	36,1	12,6	17,2	24,2	26,9	32,9	46,8
Total capacity in heating mode	(2)	kW	1,25	1,67	2,31	2,76	3,34	3,87	4,36	4,82	5,18	6,32
Water flow in heating	(2)	m³/h	0,110	0,146	0,203	0,242	0,293	0,339	0,382	0,423	0,454	0,554
Pressure drop in heating	(2)	kPa	6,2	10,7	13,3	18,6	27,0	35,6	37,5	45,2	54,6	79,1
Noise Pressure	(3)	dB(A)	39	45	42	47	45	50	47	50	48	55
Noise Power	(4)	dB(A)	48	54	51	56	54	59	56	59	57	64
MED SPEED												
Air flow		m³/h	210	290	410	500	560	670	780	910	1010	1180
Total capacity in cooling mode	(1)	kW	1,16	1,74	2,33	2,85	3,08	3,75	4,50	5,06	5,41	6,62
Sensible capacity in cooling mode	(1)	kW	0,90	1,31	1,77	2,22	2,43	2,95	3,49	3,99	4,16	5,16
Max water flow	(1)	m³/h	0,200	0,300	0,401	0,491	0,530	0,646	0,775	0,871	0,931	1,140
Mad pressure drop	(1)	kPa	5,4	9,6	20,5	28,0	8,2	12,4	18,5	21,2	25,5	36,5
Total capacity in heating mode	(2)	kW	0,97	1,45	1,89	2,31	2,71	3,30	3,81	4,28	4,56	5,57
Water flow in heating	(2)	m³/h	0,085	0,127	0,166	0,203	0,238	0,289	0,334	0,375	0,400	0,488
Pressure drop in heating	(2)	kPa	3,9	8,2	9,1	13,3	18,3	26,4	29,2	36,3	43,1	62,5
Noise Pressure	(3)	dB(A)	31	39	37	42	39	45	44	47	45	51
Noise Power	(4)	dB(A)	40	48	46	51	48	54	53	56	54	60
MIN SPEED												
Air flow		m³/h	180	270	350	380	500	550	640	760	790	920
Total capacity in cooling mode	(1)	kW	1,00	1,49	2,07	2,31	2,85	3,02	4,06	4,50	4,71	5,40
Sensible capacity in cooling mode	(1)	kW	0,78	1,18	1,59	1,75	2,22	2,39	3,00	3,44	3,59	4,14
Max water flow	(1)	m³/h	0,172	0,257	0,356	0,398	0,491	0,520	0,699	0,775	0,811	0,930
Mad pressure drop	(1)	kPa	4,0	7,0	16,2	20,7	7,0	8,0	15,0	16,8	19,4	24,3
Total capacity in heating mode	(2)	kW	0,83	1,24	1,68	1,88	2,51	2,65	3,43	3,81	3,97	4,55
Water flow in heating	(2)	m³/h	0,073	0,109	0,147	0,165	0,220	0,232	0,301	0,334	0,348	0,399
Pressure drop in heating	(2)	kPa	2,9	6,1	7,2	9,0	15,8	17,5	24,0	29,2	33,3	42,9
Noise Pressure	(3)	dB(A)	28	37	36	37	37	39	41	44	41	45
Noise Power	(4)	dB(A)	37	46	45	46	46	48	50	53	50	54
SIZE AND WEIGHT												
A	(5)	mm	922	922	1112	1112	1302	1302	1492	1492	1682	1682
B	(5)	mm	233	233	233	233	233	233	233	233	233	233
H	(5)	mm	499	499	499	499	499	499	499	499	499	499
Operating weight	(5)	kg	17	18	21	22	29	30	33	35	38	40

Notes:
1 Room temperature 27°C d.b./19°C w.b.; Chilled water (in/out) 7/12°C
2 Room temperature 20°C d.b.; Hot water (in/out) 70/60 °C; Supplementary coil 1-row
3 Sound pressure in semianechoic room at 1 (m.) from fan front and 1 (m.) from the ground
4 Sound power on the basis of measurements made in compliance with Eurovent 8/2.
5 Unit in standard configuration/execution, without optional accessories.

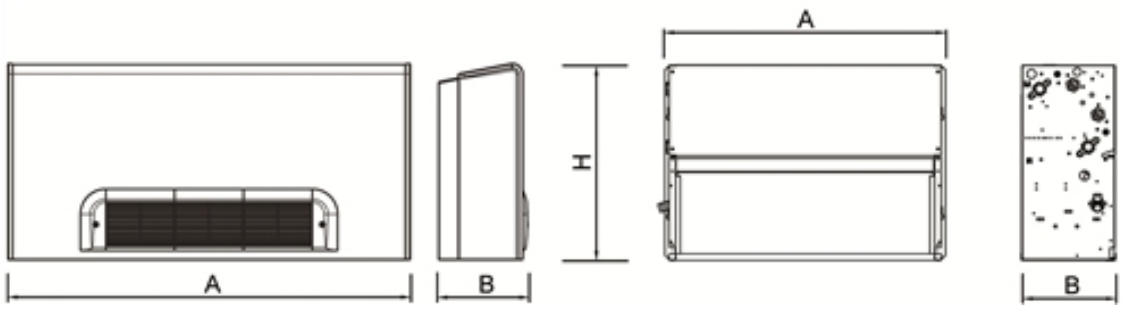

Hydronic terminals

i-LIFE2 0202 - 1004

Professional fan-coil with cabinet or buit-in version, powered by EC Brushless Centrifugal Fan 2,00-7,50 kW

New i-LIFE2 fancoil is powered by a modulating speed centrifugal fan. This new concept of fancoil operates with continuous air flow regulation assuring the best comfort and a concrete energy savings. Thanks to the different versions, with cabinet or buit-in, low air intake or front air intake, vertical or horizontal installation, it results very easy to find the perfect solution for any requirement . A dedicated range of controllers allows a user friendly and complete regulation of all the functions, and an easy integration in home automation, centralization and Building Management Systems.

Version

DFIO	built-in version, front air intake, horizontal installation
DFIV	built-in version, front air intake, vertical installation
DFMO	version with cabinet, front air intake, horizontal installation
DFMV	version with cabinet, front air intake, vertical installation
DLIO	built-in version, low air intake, horizontal installation
DLIV	built-in version, low air intake, vertical installation.
DLMO	version with cabinet, low air intake, horizontal installation
DLMV	version with cabinet, low air intake, vertical installation

Features

High efficiency EC motor.
Modulating speed centrifugal fan and air flow regulation.
Energy consumption reduced by more than 50%
Coils with aluminium fins and cooper pipes.
Configurations for 2 and 4 pipe Systems.
Left-hand water connections, easy convertible into right-hand, by simply turning the coil
Air filter on all models.
Automatically closing flap to cover and protect electric controls from dripping water (in conformity with directive 60335-2-40).
Elegant cover structure that integrates the use of high quality plastic materials, with traditional galvanized and precoated materials.
Structure in galvanised steel of high thickness for maximum resistance to rust;
Auxiliary drain pan with thermal insulation for all Horizontal versions, made of galvanized steel.
Plastic drain pan for all Vertical versions.

Accessory

- Hot water coil kit
- Kit RS485 - interface for Building Management System
- Kit control board to manage 0-10V or 3 points modulating valve unit
- Main coil 2-way/3-way valve unit
- Additional coil 2-way/3-way valve unit
- Kit LIFE2 BOX
- Kit Gateway interface for MyHome Bticino System
- Air intake grille kit with version cover
- Straight and angular (90°) plenum kits for air outlet
- Plenum kit with round, streight or 90° air ducts.
- Straight and angular (90°) plenum kits for air inlet
- Heating element kit
- Horizontal and vertical fan coil auxiliary tray

Commands

EK plug-in control /EKW wall mounted control
User interface for selection of functioning mode (OFF/summer/winter/AUTO), fan speed (Max/Med/Min/AUTO), temperature set. Control of main and additional coil valve unit (summer/winter - 2 and 4 pipes installation) . Management of traditional ON/OFF valve unit or modulating valve unit 0-10V or 3 points . Air and water temperature probe. Multifunction digital input configurable by user. Configuration dip switch.
Modbus protocol for installation in BMS (e.g. Idrorelax system by Climaveneta). Installation and management of Master-Slave system up to 8 LIFE fan coil units.
Easy control installation thanks to 2 wires connection.
iK control with LCD screen
Interface with LCD screen with user-friendly icons. Control kit for universal installation: wall-mounted as well as plug-in. Selection of functioning mode (OFF/summer/winter/AUTO), fan speed (Max/Med/Min/AUTO), temperature set. Control iK could function manually or with weekly timer regulation configurable by the customer.
Control of main coil valve unit (summer/winter - 2 pipes) and additional coil (winter - 4 pipes). Management of traditional ON/OFF valve unit or modulating valve unit 0-10V or 3 points (supply 230 VAC or 24V) .
Parameters configurable directly by user. Modbus protocol for installation in Building Management System (e.g. Idrorelax system by Climaveneta). Installation and management of Master-Slave system up to 8 LIFE fan coil units.
Easy control installation thanks to 2 wires connection through HB power board

i-LIFE2 / DFI - DLI			0202	0402	0602	0802	1002
ELECTRICAL DATA							
Power supply		V/ph/Hz	230/1/50	230/1/50	230/1/50	230/1/50	230/1/50
Max absorbd power		W	48	54	65	74	73
2 PIPES SYSTEM CONFIGURATION							
MAX SPEED							
Air flow		m³/h	360	590	815	980	1310
Total capacity in cooling mode	(1)	kW	2,00	3,40	4,40	5,70	7,50
Sensible capacity in cooling mode	(1)	kW	1,59	2,61	3,52	4,38	5,81
Max water flow	(1)	m³/h	0,344	0,585	0,757	0,981	1,291
Mad pressure drop	(1)	kPa	12,7	36,1	17,2	26,9	46,8
Total capacity in heating mode	(2)	kW	2,82	4,40	6,06	7,74	10,1
Water flow in heating	(2)	m³/h	0,345	0,584	0,758	0,979	1,288
Pressure drop in heating	(2)	kPa	10,9	34,5	14,6	23,3	40,9
Noise Pressure	(3)	dB(A)	48	51	53	54	56
Noise Power	(4)	dB(A)	57	60	62	63	65
MED SPEED							
Air flow		m³/h	270	380	550	760	920
Total capacity in cooling mode	(1)	kW	1,49	2,31	3,02	4,50	5,40
Sensible capacity in cooling mode	(1)	kW	1,18	1,75	2,39	3,44	4,14
Max water flow	(1)	m³/h	0,257	0,398	0,520	0,775	0,930
Mad pressure drop	(1)	kPa	7,0	20,7	8,0	16,8	24,3
Total capacity in heating mode	(2)	kW	2,08	3,07	4,15	6,12	7,13
Water flow in heating	(2)	m³/h	0,257	0,398	0,519	0,775	0,923
Pressure drop in heating	(2)	kPa	6,2	17,3	7,1	15,0	22,1
Noise Pressure	(3)	dB(A)	39	42	44	45	47
Noise Power	(4)	dB(A)	48	51	53	54	56
MIN SPEED							
Air flow		m³/h	180	238	286	328	542
Total capacity in cooling mode	(1)	kW	1,02	1,48	1,94	2,42	3,27
Sensible capacity in cooling mode	(1)	kW	0,81	1,15	1,49	1,88	2,46
Max water flow	(1)	m³/h	0,176	0,255	0,334	0,417	0,563
Mad pressure drop	(1)	kPa	3,3	10,9	3,3	4,8	9,0
Total capacity in heating mode	(2)	kW	1,43	1,97	2,67	3,29	4,32
Water flow in heating	(2)	m³/h	0,176	0,255	0,334	0,417	0,560
Pressure drop in heating	(2)	kPa	3,0	7,8	3,1	4,7	8,7
Noise Pressure	(3)	dB(A)	31	33	33	34	37
Noise Power	(4)	dB(A)	40	42	42	43	46
SIZE AND WEIGHT							
A	(5)	mm	450	650	850	1050	1250
B	(5)	mm	215	215	215	215	215
H	(5)	mm	450	450	450	450	450
Operating weight	(5)	kg	11	14	21	24	28

Notes:
1 Room temperature 27°C d.b./19°C w.b.; Chilled water (in/out) 7/12°C
2 Room temperature 20°C d.b.; Hot water (in/out) 50/* °C (with identical flow note1)
3 Sound pressure in semianechoic room at 1 (m.) from fan front and 1 (m.) from the ground
4 Sound power on the basis of measurements made in compliance with Eurovent 8/2.
5 Unit in standard configuration/execution, without optional accessories.

i-LIFE2 / DFM - DLM			0202	0402	0602	0802	1002
ELECTRICAL DATA							
Power supply		V/ph/Hz	230/1/50	230/1/50	230/1/50	230/1/50	230/1/50
Max absorbd power		W	48	54	65	74	73
2 PIPES SYSTEM CONFIGURATION							
MAX SPEED							
Air flow		m³/h	360	590	815	980	1310
Total capacity in cooling mode	(1)	kW	2,00	3,40	4,40	5,70	7,50
Sensible capacity in cooling mode	(1)	kW	1,59	2,61	3,52	4,38	5,81
Max water flow	(1)	m³/h	0,344	0,585	0,757	0,981	1,291
Mad pressure drop	(1)	kPa	12,7	36,1	17,2	26,9	46,8
Total capacity in heating mode	(2)	kW	2,82	4,40	6,06	7,74	10,1
Water flow in heating	(2)	m³/h	0,345	0,584	0,758	0,979	1,288
Pressure drop in heating	(2)	kPa	10,9	34,5	14,6	23,3	40,9
Noise Pressure	(3)	dB(A)	48	51	53	54	56
Noise Power	(4)	dB(A)	57	60	62	63	65
MED SPEED							
Air flow		m³/h	270	380	550	760	920
Total capacity in cooling mode	(1)	kW	1,49	2,31	3,02	4,50	5,40
Sensible capacity in cooling mode	(1)	kW	1,18	1,75	2,39	3,44	4,14
Max water flow	(1)	m³/h	0,257	0,398	0,520	0,775	0,930
Mad pressure drop	(1)	kPa	7,0	20,7	8,0	16,8	24,3
Total capacity in heating mode	(2)	kW	2,08	3,07	4,15	6,12	7,13
Water flow in heating	(2)	m³/h	0,257	0,398	0,519	0,775	0,923
Pressure drop in heating	(2)	kPa	6,2	17,3	7,1	15,0	22,1
Noise Pressure	(3)	dB(A)	39	42	44	45	47
Noise Power	(4)	dB(A)	48	51	53	54	56
MIN SPEED							
Air flow		m³/h	180	238	286	328	542
Total capacity in cooling mode	(1)	kW	1,02	1,48	1,94	2,42	3,27
Sensible capacity in cooling mode	(1)	kW	0,81	1,15	1,49	1,88	2,46
Max water flow	(1)	m³/h	0,176	0,255	0,334	0,417	0,563
Mad pressure drop	(1)	kPa	3,3	10,9	3,3	4,8	9,0
Total capacity in heating mode	(2)	kW	1,43	1,97	2,67	3,29	4,32
Water flow in heating	(2)	m³/h	0,176	0,255	0,334	0,417	0,560
Pressure drop in heating	(2)	kPa	3,0	7,8	3,1	4,7	8,7
Noise Pressure	(3)	dB(A)	31	33	33	34	37
Noise Power	(4)	dB(A)	40	42	42	43	46
SIZE AND WEIGHT							
A	(5)	mm	922	1112	1302	1492	1682
B	(5)	mm	233	233	233	233	233
H	(5)	mm	499	499	499	499	499
Operating weight	(5)	kg	14	17	24	28	32

Notes:

1 Room temperature 27°C d.b./19°C w.b.; Chilled water (in/out) 7/12°C
2 Room temperature 20°C d.b.; Hot water (in/out) 50/* °C (with identical flow note1)
3 Sound pressure in semianechoic room at 1 (m.) from fan front and 1 (m.) from the ground
4 Sound power on the basis of measurements made in compliance with Eurovent 8/2.
5 Unit in standard configuration/execution, without optional accessories.

i-LIFE2 / DFI - DLI			0204	0404	0604	0804	1004
ELECTRICAL DATA							
Power supply		V/ph/Hz	230/1/50	230/1/50	230/1/50	230/1/50	230/1/50
Max absorbd power		W	48	54	65	74	73
4 PIPES SYSTEM CONFIGURATION							
MAX SPEED							
Air flow		m³/h	360	590	815	980	1310
Total capacity in cooling mode	(1)	kW	2,00	3,40	4,40	5,70	7,50
Sensible capacity in cooling mode	(1)	kW	1,59	2,61	3,52	4,38	5,81
Max water flow	(1)	m³/h	0,344	0,585	0,757	0,981	1,291
Mad pressure drop	(1)	kPa	12,7	36,1	17,2	26,9	46,8
Total capacity in heating mode	(2)	kW	1,67	2,76	3,87	4,82	6,32
Water flow in heating	(2)	m³/h	0,146	0,242	0,339	0,423	0,554
Pressure drop in heating	(2)	kPa	10,7	18,6	35,6	45,2	79,1
Noise Pressure	(3)	dB(A)	48	51	53	54	56
Noise Power	(4)	dB(A)	57	60	62	63	65
MED SPEED							
Air flow		m³/h	270	380	550	760	920
Total capacity in cooling mode	(1)	kW	1,49	2,31	3,02	4,50	5,40
Sensible capacity in cooling mode	(1)	kW	1,18	1,75	2,39	3,44	4,14
Max water flow	(1)	m³/h	0,257	0,398	0,520	0,775	0,930
Mad pressure drop	(1)	kPa	7,0	20,7	8,0	16,8	24,3
Total capacity in heating mode	(2)	kW	1,24	1,88	2,65	3,81	4,55
Water flow in heating	(2)	m³/h	0,109	0,165	0,232	0,334	0,399
Pressure drop in heating	(2)	kPa	6,1	9,0	17,5	29,2	42,9
Noise Pressure	(3)	dB(A)	39	42	44	45	47
Noise Power	(4)	dB(A)	48	51	53	54	56
MIN SPEED							
Air flow		m³/h	180	238	286	328	542
Total capacity in cooling mode	(1)	kW	1,02	1,48	1,94	2,42	3,27
Sensible capacity in cooling mode	(1)	kW	0,81	1,15	1,49	1,88	2,46
Max water flow	(1)	m³/h	0,176	0,255	0,334	0,417	0,563
Mad pressure drop	(1)	kPa	3,3	10,9	3,3	4,8	9,0
Total capacity in heating mode	(2)	kW	0,85	1,20	1,71	2,05	2,75
Water flow in heating	(2)	m³/h	0,075	0,105	0,150	0,180	0,241
Pressure drop in heating	(2)	kPa	3,0	3,8	7,7	9,2	16,8
Noise Pressure	(3)	dB(A)	31	33	33	34	37
Noise Power	(4)	dB(A)	40	42	42	43	46
SIZE AND WEIGHT							
A	(5)	mm	450	650	850	1050	1250
B	(5)	mm	215	215	215	215	215
H	(5)	mm	450	450	450	450	450
Operating weight	(5)	kg	12	15	22	26	30

Notes:
1 Room temperature 27°C d.b./19°C w.b., Chilled water (in/out) 7/12°C
2 Room temperature 20°C d.b., hot water (in/out) 70/60°C
3 Sound pressure in semianechoic room at 1 (m.) from fan front and 1 (m.) from the ground
4 Sound power on the basis of measurements made in compliance with Eurovent 8/2.
5 Unit in standard configuration/execution, without optional accessories.

i-LIFE2 / DFM - DLM			0204	0404	0604	0804	1004
ELECTRICAL DATA							
Power supply		V/ph/Hz	230/1/50	230/1/50	230/1/50	230/1/50	230/1/50
Max absorbd power		W	48	54	65	74	73
4 PIPES SYSTEM CONFIGURATION							
MAX SPEED							
Air flow		m³/h	360	590	815	980	1310
Total capacity in cooling mode	(1)	kW	2,00	3,40	4,40	5,70	7,50
Sensible capacity in cooling mode	(1)	kW	1,59	2,61	3,52	4,38	5,81
Max water flow	(1)	m³/h	0,344	0,585	0,757	0,981	1,291
Mad pressure drop	(1)	kPa	12,7	36,1	17,2	26,9	46,8
Total capacity in heating mode	(2)	kW	1,67	2,76	3,87	4,82	6,32
Water flow in heating	(2)	m³/h	0,146	0,242	0,339	0,423	0,554
Pressure drop in heating	(2)	kPa	10,7	18,6	35,6	45,2	79,1
Noise Pressure	(3)	dB(A)	48	51	53	54	56
Noise Power	(4)	dB(A)	57	60	62	63	65
MED SPEED							
Air flow		m³/h	270	380	550	760	920
Total capacity in cooling mode	(1)	kW	1,49	2,31	3,02	4,50	5,40
Sensible capacity in cooling mode	(1)	kW	1,18	1,75	2,39	3,44	4,14
Max water flow	(1)	m³/h	0,257	0,398	0,520	0,775	0,930
Mad pressure drop	(1)	kPa	7,0	20,7	8,0	16,8	24,3
Total capacity in heating mode	(2)	kW	1,24	1,88	2,65	3,81	4,55
Water flow in heating	(2)	m³/h	0,109	0,165	0,232	0,334	0,399
Pressure drop in heating	(2)	kPa	6,1	9,0	17,5	29,2	42,9
Noise Pressure	(3)	dB(A)	39	42	44	45	47
Noise Power	(4)	dB(A)	48	51	53	54	56
MIN SPEED							
Air flow		m³/h	180	238	286	328	542
Total capacity in cooling mode	(1)	kW	1,02	1,48	1,94	2,42	3,27
Sensible capacity in cooling mode	(1)	kW	0,81	1,15	1,49	1,88	2,46
Max water flow	(1)	m³/h	0,176	0,255	0,334	0,417	0,563
Mad pressure drop	(1)	kPa	3,3	10,9	3,3	4,8	9,0
Total capacity in heating mode	(2)	kW	0,85	1,20	1,71	2,05	2,75
Water flow in heating	(2)	m³/h	0,075	0,105	0,150	0,180	0,241
Pressure drop in heating	(2)	kPa	3,0	3,8	7,7	9,2	16,8
Noise Pressure	(3)	dB(A)	31	33	33	34	37
Noise Power	(4)	dB(A)	40	42	42	43	46
SIZE AND WEIGHT							
A	(5)	mm	922	1112	1302	1492	1682
B	(5)	mm	233	233	233	233	233
H	(5)	mm	499	499	499	499	499
Operating weight	(5)	kg	15	18	25	29	33

Notes:
1 Room temperature 27°C d.b./19°C w.b.; Chilled water (in/out) 7/12°C
2 Room temperature 20°C d.b.; Hot water (in/out) 70/60 °C; Supplementary coil 1-row
3 Sound pressure in semianechoic room at 1 (m.) from fan front and 1 (m.) from the ground
4 Sound power on the basis of measurements made in compliance with Eurovent 8/2.
5 Unit in standard configuration/execution, without optional accessories.

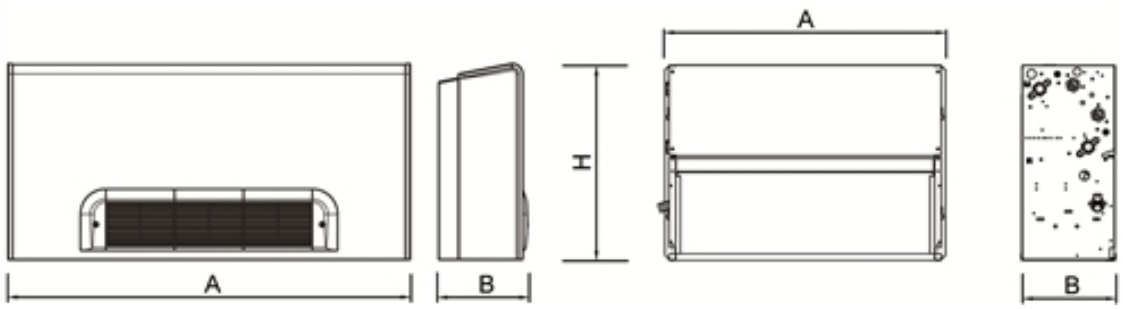

Hydronic terminals

a-LIFE HP 230 - 840

Version

DFI	built-in version, front air intake
DLI	built-in version, bottom air intake

Features

Four pipe system: 3+2 and 4+1 (number of rows for main + additional coil);
High pressure centrifugal fan unit for ducted system;
6-speed autotransformer;
Air filter on all models.
Structure in hot galvanised steel for maximum resistance to rust;

Accessory

- Hot water coil kit 1 row and 2 rows
- Kit RS485 - interface for Building Management System
- Kit control board to manage 0-10V or 3 points modulating valve unit
- Main and additional coil valve unit ON/OFF, PWM, 0-10 V, 3 points 2-way or 3-way
- Main and additional coil valve unit ON/OFF, PWM, 0-10 V, 3 points 2-way or 3-way
- Straight and angular (90°) plenum kits for air inlet
- Straight and angular (90°) plenum kits for air outlet
- Plenum kit with round, streight or 90° air ducts.
- Electric heaters

High head fan-coil for professional application built-in version 2,83-10,2 kW

a-LIFE HP are professional high-head fan coils by Climaveneta. The enhanced motor and the built-in version make these units ideal for ducted systems in tertiary and commercial sectors.

Commands

NSW wall mounted
Fan speed slider, mode slider (OFF/summer/winter). ON/OFF valve unit control (summer/winter for 2 pipes installation), ON/OFF second valve unit control (winter for 4 pipes installation). Setting for minimum temperature thermostat.
PSW wall mounted
Fan speed slider, mode slider (OFF/summer/winter). ON/OFF valve unit control (summer/winter for 2 pipes installation), ON/OFF second valve unit control (winter for 4 pipes installation). Remote water temperature probe.
MTW wall mounted
Fan speed slider, mode slider (OFF/summer/winter). Thermostat with set point regulation. ON/OFF valve unit control (summer/winter for 2 pipes installation), ON/OFF second valve unit control (winter for 4 pipes installation). Room temperature probe. Remote water temperature probe.
ATW wall mounted
Mode button (OFF/summer/winter/AUTO), fan speed button (Max/Med/Min/AUTO). Thermostat with set point regulation. ON/OFF valve unit control (summer/winter for 2 and 4 pipes installation). Control of traditional or PWM modulating valve units. Room temperature probe and water temperature probe. Digital input configurable as: window contact, economy, heating or cooling remote changeover, periodic ventilation. Configuration dip switch. TTL serial port with Modbus protocol for installation in BMS.

a-LIFE HP / DLI - DFI			230	240	430	440	530	540	730	740	830	840
ELECTRICAL DATA												
Power supply		V/ph/Hz	230-1-50	230-1-50	230-1-50	230-1-50	230-1-50	230-1-50	230-1-50	230-1-50	230-1-50	230-1-50
Max absorbd power		W	140	140	120	120	210	210	240	240	270	270
2 PIPES SYSTEM CONFIGURATION												
MAX SPEED												
Air flow		m³/h	460	460	470	470	800	800	890	890	1330	1330
Total capacity in cooling mode	(1)	kW	2,83	3,34	4,04	4,69	5,58	6,54	7,36	8,15	9,95	10,2
Sensible capacity in cooling mode	(1)	kW	2,32	2,54	3,13	3,45	4,39	4,90	5,45	5,90	7,53	7,94
Max water flow	(1)	m³/h	0,487	0,574	0,695	0,807	0,960	1,125	1,266	1,402	1,711	1,758
Mad pressure drop	(1)	kPa	5,0	45,8	11,0	9,0	23,0	18,0	20,0	16,0	21,0	44,8
Total capacity in heating mode	(2)	kW	2,23	4,29	4,76	5,34	6,90	7,86	5,45	9,14	11,3	12,0
Water flow in heating	(2)	m³/h	0,490	0,570	0,690	0,810	0,960	1,120	1,270	1,400	1,710	1,760
Pressure drop in heating	(2)	kPa	4,0	51,5	13,0	9,0	21,0	16,0	35,0	15,0	19,0	35,1
Noise Pressure	(3)	dB(A)	48	49	51	52	51	52	54	55	57	58
Noise Power	(4)	dB(A)	59	60	62	63	62	63	65	66	68	69
MED SPEED												
Air flow		m³/h	320	320	405	405	520	520	810	810	1130	1130
Total capacity in cooling mode	(1)	kW	2,59	3,04	3,37	3,91	4,41	5,15	6,47	7,09	8,83	9,00
Sensible capacity in cooling mode	(1)	kW	2,10	2,29	2,56	2,84	3,37	3,78	4,74	5,09	6,60	6,94
Max water flow	(1)	m³/h	0,445	0,523	0,580	0,673	0,759	0,886	1,113	1,219	1,519	1,548
Mad pressure drop	(1)	kPa	4,0	36,7	8,0	6,0	15,0	12,0	16,0	12,0	17,0	35,4
Total capacity in heating mode	(2)	kW	2,07	3,87	3,91	4,33	3,59	5,96	7,42	7,72	6,93	10,4
Water flow in heating	(2)	m³/h	0,445	0,523	0,580	0,673	0,759	0,886	1,113	1,219	1,519	1,548
Pressure drop in heating	(2)	kPa	3,0	40,0	8,0	5,0	13,0	10,0	14,0	11,0	15,0	25,3
Noise Pressure	(3)	dB(A)	40	47	44	45	44	45	45	46	49	52
Noise Power	(4)	dB(A)	51	58	55	56	55	56	56	57	60	63
MIN SPEED												
Air flow		m³/h	275	275	290	290	280	280	695	695	720	720
Total capacity in cooling mode	(1)	kW	1,95	2,30	2,31	2,59	2,87	3,26	4,67	5,11	6,27	6,22
Sensible capacity in cooling mode	(1)	kW	1,54	1,70	1,70	1,85	2,11	2,32	3,36	3,46	4,55	4,69
Max water flow	(1)	m³/h	0,335	0,396	0,397	0,445	0,494	0,561	0,803	0,879	1,078	1,070
Mad pressure drop	(1)	kPa	2,0	22,9	4,0	3,0	7,0	5,0	9,0	7,0	9,0	18,9
Total capacity in heating mode	(2)	kW	1,64	2,84	2,61	2,76	3,30	3,61	3,74	5,14	6,74	6,86
Water flow in heating	(2)	m³/h	0,335	0,396	0,397	0,445	0,494	0,561	0,803	0,879	1,078	1,070
Pressure drop in heating	(2)	kPa	2,0	22,9	3,0	3,0	7,0	4,0	8,0	6,0	5,0	13,6
Noise Pressure	(3)	dB(A)	31	37	33	34	33	34	36	37	38	41
Noise Power	(4)	dB(A)	42	48	44	45	44	45	47	48	49	52
SIZE AND WEIGHT												
A	(5)	mm	601	601	791	791	981	981	1171	1171	1361	1361
B	(5)	mm	225	225	225	225	225	225	225	225	225	225
H	(5)	mm	495	495	495	495	495	495	495	495	495	495
Operating weight	(5)	kg	18	18	21	21	27	27	29	29	40	40

Notes:
1 Room temperature 27°C d.b./19°C w.b.; Chilled water (in/out) 7/12°C
2 Room temperature 20°C d.b.; Hot water (in/out) 50/* °C (with identical flow note1)
3 Sound pressure in semianechoic room at 1 (m.) from fan front and 1 (m.) from the ground
4 Sound power on the basis of measurements made in compliance with Eurovent 8/2.
5 Unit in standard configuration/execution, without optional accessories.

a-LIFE HP / DLI - DFI			230	430	530	730	830
ELECTRICAL DATA							
Power supply		V/ph/Hz	230-1-50	230-1-50	230-1-50	230-1-50	230-1-50
Max absorbd power		W	140	120	210	240	270
4 PIPES SYSTEM CONFIGURATION							
MAX SPEED							
Air flow		m³/h	460	470	800	890	1330
Total capacity in cooling mode	(1)	kW	2,83	4,04	5,58	7,26	9,95
Sensible capacity in cooling mode	(1)	kW	2,32	3,13	4,39	5,45	7,53
Max water flow	(1)	m³/h	0,487	0,695	0,960	1,249	1,711
Mad pressure drop	(1)	kPa	5,0	21,1	23,0	20,0	21,0
Total capacity in heating mode	(2)	kW	2,23	3,34	4,42	5,45	7,68
Water flow in heating	(2)	m³/h	0,192	0,287	0,380	0,469	0,660
Pressure drop in heating	(2)	kPa	4,0	29,6	20,0	35,0	10,0
Noise Pressure	(3)	dB(A)	48	51	51	54	57
Noise Power	(4)	dB(A)	59	62	62	65	68
MED SPEED							
Air flow		m³/h	320	405	520	810	1130
Total capacity in cooling mode	(1)	kW	2,59	3,37	4,41	6,47	8,83
Sensible capacity in cooling mode	(1)	kW	2,10	2,56	3,37	4,74	6,60
Max water flow	(1)	m³/h	0,445	0,580	0,759	1,113	1,519
Mad pressure drop	(1)	kPa	4,0	15,4	15,0	16,0	17,0
Total capacity in heating mode	(2)	kW	2,07	2,86	3,59	4,88	6,93
Water flow in heating	(2)	m³/h	0,178	0,246	0,309	0,420	0,596
Pressure drop in heating	(2)	kPa	3,0	18,2	13,0	28,0	8,0
Noise Pressure	(3)	dB(A)	40	44	44	45	49
Noise Power	(4)	dB(A)	51	55	55	56	60
MIN SPEED							
Air flow		m³/h	275	290	280	695	720
Total capacity in cooling mode	(1)	kW	1,95	2,31	2,87	4,67	6,27
Sensible capacity in cooling mode	(1)	kW	1,54	1,70	2,11	3,36	4,55
Max water flow	(1)	m³/h	0,335	0,397	0,494	0,803	1,078
Mad pressure drop	(1)	kPa	2,0	7,7	7,0	9,0	9,0
Total capacity in heating mode	(2)	kW	1,64	2,07	2,46	3,74	5,17
Water flow in heating	(2)	m³/h	0,141	0,178	0,212	0,322	0,445
Pressure drop in heating	(2)	kPa	2,0	11,4	7,0	18,0	5,0
Noise Pressure	(3)	dB(A)	31	33	33	36	38
Noise Power	(4)	dB(A)	42	44	44	47	49
SIZE AND WEIGHT							
A	(5)	mm	601	791	981	1171	1361
B	(5)	mm	225	225	225	225	225
H	(5)	mm	495	495	495	495	495
Operating weight	(5)	kg	18	21	27	29	40

Notes:
1 Room temperature 27°C d.b./19°C w.b., Chilled water (in/out) 7/12°C
2 Room temperature 20°C d.b., hot water (in/out) 70/60°C
3 Sound pressure in semianechoic room at 1 (m.) from fan front and 1 (m.) from the ground
4 Sound power on the basis of measurements made in compliance with Eurovent 8/2.
5 Unit in standard configuration/execution, without optional accessories.

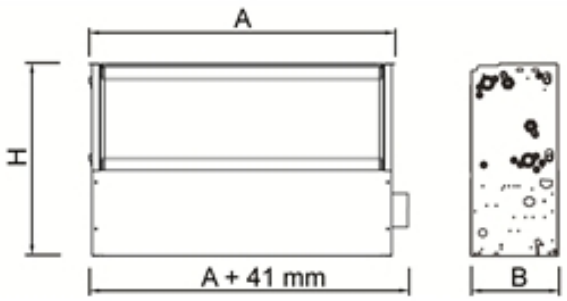

Hydronic terminals

i-LIFE SLIM 102 - 502

Residential fan-coils with cabinet or concealed version, with inverter motor e tangential fan.
0,84-3,86 kW

i-LIFE SLIM is the new fan coil Climaveneta , with inverter technology for heating, cooling and dehumidifying. Its elegant design with only 13 cm depth makes i-LIFE Slim the perfect solution for residential applications. The fan coil is also available with i-LIFE R-SLIM inverter version with radiant panel.
The brushless motor allows a perfect adaptation to thermal load, without any temperature fluctuations. Tangential fans operate through continuous air flow modulation, with no speed steps or relay switching as traditional fan coil units. High efficiency is guaranteed in any HVAC installation setup, in combination with any low temperature heat generator.

Version

DLIU	Built-in version for universal installation.
DLMV	Version with cabinet for vertical installation
DLMO	Version with cabinet for horizontal installation
DLRV	Radiant Version with cabinet for vertical installation.

Features

DC motor with inverter technology with continuous speed regulation, to ensure the best performance with a very low noise level.
Elegant design and reduced depth of only 13 cm, for installation in a residential installation.
Tangential fan with asymetric blades that ensures the continuous modulation of the air flow for a better comfort and real energy savings.
Coil with large frontal area that allows to reach high air flow with very low pressure drop.
Honeycomb polypropylene air filter which can be regenerated by washing or blowing.
Elegant cover structure that integrates the use of high quality plastic materials, with traditional galvanized and precoated materials.
Elegant cover structure that integrates the use of high quality plastic materials, with traditional galvanized and epoxy powder coated materials.
Configuration for 2 pipes systems. (upon request also for 4 pipes systems)

Accessory

- Drain Pan for horizontal installation
- Main coil 2-way/3-way valve unit
- Fitting for air intake in built-in installation
- Telescopic air flow duct and 90° duct for false ceiling and build in installation
- Alluminium air flow vent for wall mounting
- Alluminium Air intake grid
- UVC air sterilisation device
- Casing for build in version - i-LIFE Slim Box
- Casing cover panel with frame and front panel grid
- Eurokonus adapter
- Pair of decorative and structural feet

Commands

iKS - on board controller
On-board control for unit with cabinet complete with touch keypad with 8 touch key, LCD display with white light symbols. Modulating fan speed with PID logic, temperature regulation, winter/summer mode, automatic mode for the speed regulation, night mode for a silent operation. Minimum water probe and solenoid management,
Remote control iKSW
Remote controller for built-in and with cabinet units complete with touch keypad with 8 touch keys, LCD display with white light symbols. Modulating fan speed with PID logic, temperature regulation, winter/summer mode, automatic mode for the speed regulation, night mode for a silent operation. Minimum water probe and solenoid valve management. A maximum of 31 fancoils can be connected to the iKSW controller for open space rooms.
iHBS - On board semplified control
Simple on board controller for buit - in and with cabinet units, to be coupled with remote controller iKSW. iHBS controller has a touch button and a LED for the visualization of the devise's operation. All the parameters are set up from iKSW.
ATS - On board controller with 4 speed regulation
On-board controller for units with cabinet. Interface with 4 keys for the temperature selection, winter/summer mode, 4 speed regulation, display for room temperature vizualization. Minimum water temperature probe and solenoid valve management.

i-LIFE SLIM / DLMO - DLMV			102	202	302	402	502
ELECTRICAL DATA							
Power supply		V/ph/Hz	230/1/50	230/1/50	230/1/50	230/1/50	230/1/50
Max absorbd power		W	18	27	35	35	37
2 PIPES SYSTEM CONFIGURATION							
MAX SPEED							
Air flow		m³/h	162	320	461	576	648
Total capacity in cooling mode	(1)	kW	0,84	1,79	2,69	3,39	3,86
Sensible capacity in cooling mode	(1)	kW	0,63	1,29	1,99	2,69	3,06
Max water flow	(1)	m³/h	0,145	0,308	0,463	0,584	0,664
Mad pressure drop	(1)	kPa	7,4	5,5	22,6	19,1	25,0
Total capacity in heating mode	(2)	kW	1,12	2,38	3,29	4,19	4,96
Water flow in heating	(2)	m³/h	0,145	0,308	0,458	0,583	0,666
Pressure drop in heating	(2)	kPa	7,4	5,5	22,1	19,0	25,1
Noise Pressure	(3)	dB(A)	41	42	44	45	46
Noise Power	(4)	dB(A)	50	51	53	54	55
MED SPEED							
Air flow		m³/h	113	252	367	453	494
Total capacity in cooling mode	(1)	kW	0,71	1,57	2,26	2,82	3,12
Sensible capacity in cooling mode	(1)	kW	0,53	1,15	1,75	2,12	2,38
Max water flow	(1)	m³/h	0,122	0,271	0,390	0,486	0,536
Mad pressure drop	(1)	kPa	5,3	4,3	16,3	13,4	15,9
Total capacity in heating mode	(2)	kW	0,91	2,04	2,76	3,49	4,04
Water flow in heating	(2)	m³/h	0,122	0,271	0,389	0,486	0,536
Pressure drop in heating	(2)	kPa	5,2	4,3	16,3	13,4	15,9
Noise Pressure	(3)	dB(A)	35	36	36	37	40
Noise Power	(4)	dB(A)	44	45	45	46	49
MIN SPEED							
Air flow		m³/h	55	155	248	370	426
Total capacity in cooling mode	(1)	kW	0,37	1,07	1,47	2,42	2,73
Sensible capacity in cooling mode	(1)	kW	0,27	0,76	1,21	1,82	2,09
Max water flow	(1)	m³/h	0,063	0,183	0,253	0,416	0,470
Mad pressure drop	(1)	kPa	1,4	2,0	7,3	9,9	12,0
Total capacity in heating mode	(2)	kW	0,39	1,40	1,82	3,00	3,59
Water flow in heating	(2)	m³/h	0,062	0,183	0,254	0,417	0,470
Pressure drop in heating	(2)	kPa	1,4	2,0	7,3	10,0	12,0
Noise Pressure	(3)	dB(A)	26	27	27	28	30
Noise Power	(4)	dB(A)	35	36	36	37	39
SIZE AND WEIGHT							
A	(5)	mm	737	937	1137	1337	1537
B	(5)	mm	131	131	131	131	131
H	(5)	mm	579	579	579	579	579
Operating weight	(5)	kg	17	20	23	26	29

Notes:
1 Room temperature 27°C d.b./19°C w.b.; Chilled water (in/out) 7/12°C
2 Room temperature 20°C d.b.; Hot water (in/out) 50/* °C (with identical flow note1)
3 Sound pressure in semianechoic room at 1 (m.) from fan front and 1 (m.) from the ground
4 Sound power on the basis of measurements made in compliance with Eurovent 8/2.
5 Unit in standard configuration/execution, without optional accessories.

i-LIFE SLIM / DLIU			102	202	302	402	502
ELECTRICAL DATA							
Power supply		V/ph/Hz	230/1/50	230/1/50	230/1/50	230/1/50	230/1/50
Max absorbd power		W	18	27	35	35	37
2 PIPES SYSTEM CONFIGURATION							
MAX SPEED							
Air flow		m³/h	162	320	461	576	648
Total capacity in cooling mode	(1)	kW	0,84	1,79	2,69	3,39	3,86
Sensible capacity in cooling mode	(1)	kW	0,63	1,29	1,99	2,69	3,06
Max water flow	(1)	m³/h	0,145	0,308	0,463	0,584	0,664
Mad pressure drop	(1)	kPa	7,4	5,5	22,6	19,1	25,0
Total capacity in heating mode	(2)	kW	1,12	2,38	3,29	4,19	4,96
Water flow in heating	(2)	m³/h	0,145	0,308	0,458	0,583	0,666
Pressure drop in heating	(2)	kPa	7,4	5,5	22,1	19,0	25,1
Noise Pressure	(3)	dB(A)	41	42	44	45	46
Noise Power	(4)	dB(A)	50	51	53	54	55
MED SPEED							
Air flow		m³/h	113	252	367	453	494
Total capacity in cooling mode	(1)	kW	0,71	1,57	2,26	2,82	3,12
Sensible capacity in cooling mode	(1)	kW	0,53	1,15	1,75	2,12	2,38
Max water flow	(1)	m³/h	0,122	0,271	0,390	0,486	0,536
Mad pressure drop	(1)	kPa	5,3	4,3	16,3	13,4	15,9
Total capacity in heating mode	(2)	kW	0,91	2,04	2,76	3,49	4,04
Water flow in heating	(2)	m³/h	0,122	0,271	0,389	0,486	0,536
Pressure drop in heating	(2)	kPa	5,2	4,3	16,3	13,4	15,9
Noise Pressure	(3)	dB(A)	35	36	36	37	40
Noise Power	(4)	dB(A)	44	45	45	46	49
MIN SPEED							
Air flow		m³/h	55	155	248	370	426
Total capacity in cooling mode	(1)	kW	0,37	1,07	1,47	2,42	2,73
Sensible capacity in cooling mode	(1)	kW	0,27	0,76	1,21	1,82	2,09
Max water flow	(1)	m³/h	0,063	0,183	0,253	0,416	0,470
Mad pressure drop	(1)	kPa	1,4	2,0	7,3	9,9	12,0
Total capacity in heating mode	(2)	kW	0,39	1,40	1,82	3,00	3,59
Water flow in heating	(2)	m³/h	0,062	0,183	0,254	0,417	0,470
Pressure drop in heating	(2)	kPa	1,4	2,0	7,3	10,0	12,0
Noise Pressure	(3)	dB(A)	26	27	27	28	30
Noise Power	(4)	dB(A)	35	36	36	37	39
SIZE AND WEIGHT							
A	(5)	mm	525	725	925	1125	1325
B	(5)	mm	126	126	126	126	126
H	(5)	mm	576	576	576	576	576
Operating weight	(5)	kg	9	12	15	18	21

Notes:
1 Room temperature 27°C d.b./19°C w.b.; Chilled water (in/out) 7/12°C
2 Room temperature 20°C d.b.; Hot water (in/out) 50/* °C (with identical flow note1)
3 Sound pressure in semianechoic room at 1 (m.) from fan front and 1 (m.) from the ground
4 Sound power on the basis of measurements made in compliance with Eurovent 8/2.
5 Unit in standard configuration/execution, without optional accessories.

i-LIFE SLIM / DLRV			102	202	302	402	502
ELECTRICAL DATA							
Power supply		V/ph/Hz	230/1/50	230/1/50	230/1/50	230/1/50	230/1/50
Max absorbd power		W	18	27	35	35	37
2 PIPES SYSTEM CONFIGURATION							
MAX SPEED							
Air flow		m³/h	162	320	461	576	648
Total capacity in cooling mode	(1)	kW	0,84	1,79	2,69	3,39	3,86
Sensible capacity in cooling mode	(1)	kW	0,63	1,29	1,99	2,69	3,06
Max water flow	(1)	m³/h	0,145	0,308	0,463	0,584	0,664
Mad pressure drop	(1)	kPa	7,4	5,5	22,6	19,1	25,0
Total capacity in heating mode	(2)	kW	1,12	2,38	3,29	4,19	4,96
Water flow in heating	(2)	m³/h	0,145	0,308	0,458	0,583	0,666
Pressure drop in heating	(2)	kPa	7,4	5,5	22,1	19,0	25,1
Noise Pressure	(3)	dB(A)	41	42	44	45	46
Noise Power	(4)	dB(A)	50	51	53	54	55
MED SPEED							
Air flow		m³/h	113	252	367	453	494
Total capacity in cooling mode	(1)	kW	0,71	1,57	2,26	2,82	3,12
Sensible capacity in cooling mode	(1)	kW	0,53	1,15	1,75	2,12	2,38
Max water flow	(1)	m³/h	0,122	0,271	0,390	0,486	0,536
Mad pressure drop	(1)	kPa	5,3	4,3	16,3	13,4	15,9
Total capacity in heating mode	(2)	kW	0,91	2,04	2,76	3,49	4,04
Water flow in heating	(2)	m³/h	0,122	0,271	0,389	0,486	0,536
Pressure drop in heating	(2)	kPa	5,2	4,3	16,3	13,4	15,9
Noise Pressure	(3)	dB(A)	35	36	36	37	40
Noise Power	(4)	dB(A)	44	45	45	46	49
MIN SPEED							
Air flow		m³/h	55	155	248	370	426
Total capacity in cooling mode	(1)	kW	0,37	1,07	1,47	2,42	2,73
Sensible capacity in cooling mode	(1)	kW	0,27	0,76	1,21	1,82	2,09
Max water flow	(1)	m³/h	0,063	0,183	0,253	0,416	0,470
Mad pressure drop	(1)	kPa	1,4	2,0	7,3	9,9	12,0
Total capacity in heating mode	(2)	kW	0,39	1,40	1,82	3,00	3,59
Water flow in heating	(2)	m³/h	0,062	0,183	0,254	0,417	0,470
Pressure drop in heating	(2)	kPa	1,4	2,0	7,3	10,0	12,0
Noise Pressure	(3)	dB(A)	26	27	27	28	30
Noise Power	(4)	dB(A)	35	36	36	37	39
SIZE AND WEIGHT							
A	(5)	mm	737	937	1137	1337	1537
B	(5)	mm	131	131	131	131	131
H	(5)	mm	579	579	579	579	579
Operating weight	(5)	kg	17	20	23	26	29

Notes:
1 Room temperature 27°C d.b./19°C w.b.; Chilled water (in/out) 7/12°C
2 Room temperature 20°C d.b.; Hot water (in/out) 50/* °C (with identical flow note1)
3 Sound pressure in semianechoic room at 1 (m.) from fan front and 1 (m.) from the ground
4 Sound power on the basis of measurements made in compliance with Eurovent 8/2.
5 Unit in standard configuration/execution, without optional accessories.

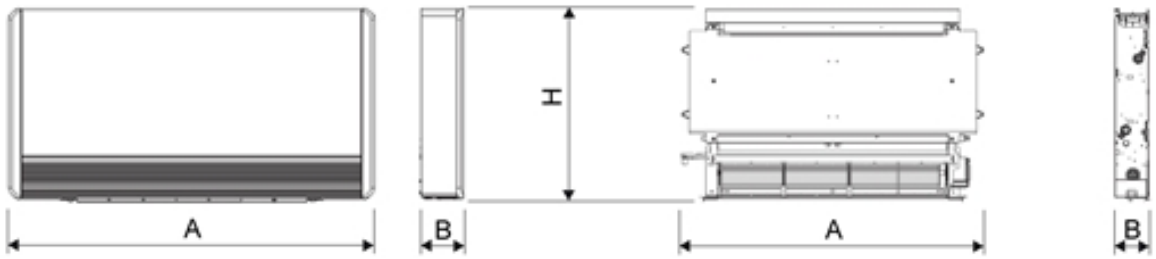

Hydronic terminals

MHD 30 - 60

Hi-wall type terminal
2,15-4,70 kW

MHD belongs to hi-wall fan-coils of Climaveneta. The compactness of this model and its exclusive elegance soften the visual impact and make it ideal for residential and small tertiary installations.

Version

- base version

Features

Fan coil in ABS with high mechanical characteristics and resistance to ageing;
Adjustable air flow direction;
Arrangement for right-left condensate drain pipe;
Removable panel;
Management of all functions by remote control

Accessory

- Frame kit
- Solenoid valve 2 ways 1/2"
- Solenoid valve kit 3 ways, 4 fits 1/2" with frame
- Condensate drain pump

Commands

Remote control
Set-point regulation. Selection of functioning mode (cool, heat, dehumidify, fan), fan speed (Max, Med, Min, AUTO). Main available function: Swing, Sleep, Timer. User-sfriendly compact remote control with fine aethetics.

MHD			30	40	50	60
ELECTRICAL DATA						
Power supply		V/ph/Hz	230-1-50	230-1-50	230-1-50	230-1-50
Max absorbd power		W	27	28	40	50
PERFORMANCE						
MAX SPEED						
Air flow		m³/h	436	632	780	920
Total capacity in cooling mode	(1)	kW	2,15	2,80	4,00	4,70
Sensible capacity in cooling mode	(1)	kW	1,82	2,48	3,40	3,60
Max water flow	(1)	m³/h	0,400	0,500	0,700	0,800
Mad pressure drop	(1)	kPa	11,4	16,0	37,0	46,0
Total capacity in heating mode	(2)	kW	2,70	3,60	4,90	5,80
Water flow in heating	(2)	m³/h	0,500	0,600	0,800	1,000
Pressure drop in heating	(2)	kPa	10,7	15,0	35,0	43,0
Noise Pressure	(3)	dB(A)	34	41	44	49
Noise Power	(4)	dB(A)	45	52	55	60
MED SPEED						
Air flow		m³/h	376	522	691	810
Total capacity in cooling mode	(1)	kW	1,85	2,00	3,40	3,90
Sensible capacity in cooling mode	(1)	kW	1,60	1,75	2,90	3,30
Max water flow	(1)	m³/h	0,300	0,300	0,600	0,700
Mad pressure drop	(1)	kPa	8,0	8,0	27,0	32,0
Total capacity in heating mode	(2)	kW	2,30	2,55	4,20	4,85
Water flow in heating	(2)	m³/h	0,400	0,400	0,700	0,800
Pressure drop in heating	(2)	kPa	7,1	7,0	26,0	30,0
Noise Pressure	(3)	dB(A)	31	31	41	45
Noise Power	(4)	dB(A)	42	42	52	56
MIN SPEED						
Air flow		m³/h	334	403	570	697
Total capacity in cooling mode	(1)	kW	1,65	1,75	3,10	3,35
Sensible capacity in cooling mode	(1)	kW	1,45	1,55	2,60	2,85
Max water flow	(1)	m³/h	0,300	0,300	0,500	0,600
Mad pressure drop	(1)	kPa	6,9	6,0	22,0	23,0
Total capacity in heating mode	(2)	kW	1,98	2,20	3,80	4,15
Water flow in heating	(2)	m³/h	0,300	0,400	0,700	0,700
Pressure drop in heating	(2)	kPa	5,9	6,0	21,0	21,0
Noise Pressure	(3)	dB(A)	27	28	37	42
Noise Power	(4)	dB(A)	38	39	48	53
SIZE AND WEIGHT						
A	(5)	mm	845	845	940	940
B	(5)	mm	270	270	298	298
H	(5)	mm	180	180	200	200
Operating weight	(5)	kg	10	10	13	13

Notes:
1 Room temperature 27°C d.b./19°C w.b., Chilled water (in/out) 7/12°C
2 Room temperature 20°C d.b., hot water (in/out) 50/* °C (identical flow rate note 1)
3 Sound pressure in semianechoic room at 1 (m.) from fan front and 1 (m.) from the ground
4 Sound power on the basis of measurements made in compliance with Eurovent 8/2.
5 Unit in standard configuration/execution, without optional accessories.

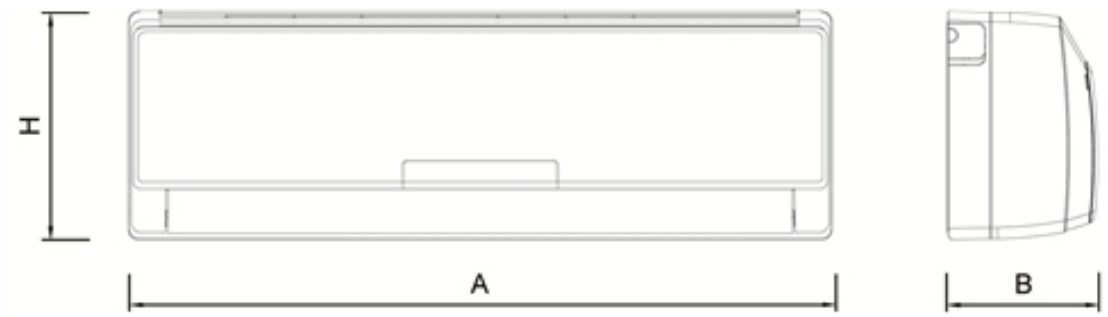

Hydronic terminals

a-CHD 0606 - 2209

Version

U - 2T	2 Pipes version
U- 4T	4 Pipes Version

Features

Frame in galvanised steel insulated with self-extinguishing closed-cell polyethylene blanket of suitable thickness, to limit heat loss and noise to a minimum. Airflow grille in ABS built in the cassette, supplied in 1 cartonbox
5-speed electric motor inclusive of thermal switch. Fan
Low-rev radial-blade fan to maximise acoustic comfort.
Coil with corrugated aluminium fins and copper pipes, tested with dried air at 14 bar.
Switchboard with power and control terminal block with screw terminals
Set-up for fresh air intake.
Set-up for duct air distribution.
Esternal Drain Pan

Accessory

- Main coil 2-way/3-way valve unit
- Additional coil 2-way/3-way valve unit
- Fresh Air renewal connection
- Duct Connection Flange
- Kit Bus Adapter for BMS
- Kit Gateway interface for MyHome Bticino System

Cassette type terminal 3,20-11,5 kW

New a- CHD cassette of Climaveneta, with 5 speeds AC motor, is available in two version: for two pipe installation (unit with single coil) and for four pipe installation (unit with double coil). Wide range of sizes and easy installation make them suitable for all types of installations.

Commands

MTW wall mounted
Fan speed slider, mode slider (OFF/summer/winter). Thermostat with set point regulation. ON/OFF valve unit control (summer/winter for 2 pipes installation), ON/OFF second valve unit control (winter for 4 pipes installation). Room temperature probe. Remote water temperature probe.
ATW wall mounted
Mode button (OFF/summer/winter/AUTO), fan speed button (Max/Med/Min/AUTO). Thermostat with set point regulation. ON/OFF valve unit control (summer/winter for 2 and 4 pipes installation). Control of traditional or PWM modulating valve units. Room temperature probe and water temperature probe. Digital input configurable as: window contact, economy, heating or cooling remote changeover, periodic ventilation. Configuration dip switch. TTL serial port with Modbus protocol for installation in BMS.

a-CHD			0606	0706	1108	2209
ELECTRICAL DATA						
Power supply		V/ph/Hz	230/1/50	230/1/50	230/1/50	230/1/50
Max absorbd power		W	60	85	147	310
PERFORMANCE						
MAX SPEED						
Air flow		m³/h	575	810	1300	2250
Total capacity in cooling mode	(1)	kW	3,20	4,56	6,90	11,5
Sensible capacity in cooling mode	(1)	kW	2,50	3,17	5,06	8,21
Max water flow	(1)	m³/h	0,551	0,785	1,188	1,980
Mad pressure drop	(1)	kPa	10,0	36,4	30,9	49,0
Total capacity in heating mode	(2)	kW	3,89	5,42	8,21	13,6
Water flow in heating	(2)	m³/h	0,556	0,784	1,187	1,988
Pressure drop in heating	(2)	kPa	7,4	34,1	26,7	46,4
Noise Pressure	(3)	dB(A)	37	49	54	59
Noise Power	(4)	dB(A)	48	60	65	70
MED SPEED						
Air flow		m³/h	290	617	960	1970
Total capacity in cooling mode	(1)	kW	2,06	3,76	5,60	10,2
Sensible capacity in cooling mode	(1)	kW	1,62	2,85	4,37	7,37
Max water flow	(1)	m³/h	0,355	0,647	0,964	1,756
Mad pressure drop	(1)	kPa	4,7	25,5	21,2	39,1
Total capacity in heating mode	(2)	kW	2,19	4,32	6,41	12,2
Water flow in heating	(2)	m³/h	0,354	0,650	0,965	1,760
Pressure drop in heating	(2)	kPa	3,7	20,5	17,6	36,5
Noise Pressure	(3)	dB(A)	29	41	46	54
Noise Power	(4)	dB(A)	40	52	57	65
MIN SPEED						
Air flow		m³/h	200	450	700	1380
Total capacity in cooling mode	(1)	kW	1,41	2,70	3,57	7,69
Sensible capacity in cooling mode	(1)	kW	1,11	2,15	2,96	5,52
Max water flow	(1)	m³/h	0,243	0,465	0,615	1,324
Mad pressure drop	(1)	kPa	2,4	13,8	9,4	23,0
Total capacity in heating mode	(2)	kW	1,56	3,27	4,81	9,08
Water flow in heating	(2)	m³/h	0,242	0,468	0,615	1,331
Pressure drop in heating	(2)	kPa	2,1	8,4	7,1	21,0
Noise Pressure	(3)	dB(A)	24	31	35	47
Noise Power	(4)	dB(A)	35	42	46	58
SIZE AND WEIGHT						
A	(5)	mm	575	575	730	830
B	(5)	mm	575	575	730	830
H	(5)	mm	250	250	290	290
Operating weight	(5)	kg	28	30	36	50

Notes:
1 Room temperature 27°C d.b./19°C w.b., Chilled water (in/out) 7/12°C
2 Room temperature 20°C d.b., hot water (in/out) 50/* °C (identical flow rate note 1)
3 Sound pressure in semianechoic room at 1 (m.) from fan front and 1 (m.) from the ground
4 Sound power on the basis of measurements made in compliance with Eurovent 8/2.
5 Unit in standard configuration/execution, without optional accessories.

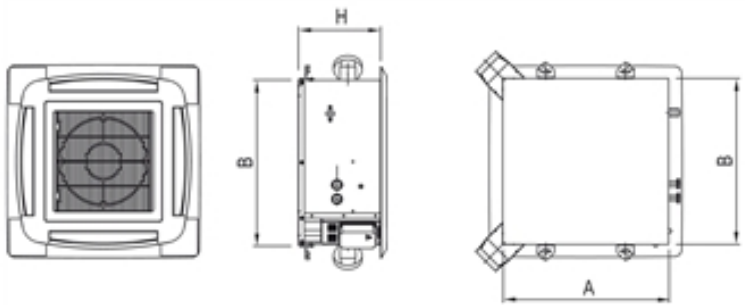

Hydronic terminals

i-CHD 0706 - 2209

Cassette type Terminal with continuous variation of air flow and cooling power 4,56-10,6 kW

i-CHD is the new cassette of Climaveneta, with high efficency EC motor and Centrifugal fans that operates through a continuous air flow modulation, with low energy consumtion and perfect comfort.
i-CHD is supplyed on 2 pipes version. For the 4 Pipes installations we reccomend the 2 Pipes i-CHD cassette with 4For2 kit valves.

Version

U - 2T	2 Pipes version
U4T	Version for 4 pipe installations, can be realized with the cassette i- CHD 2-pipe, via the valve mounting 4FOR2.

Features

High efficiency EC motor.
Modulating speed centrifugal fan and air flow regulation.
Energy consumption reduced by more than 50%
Unit coils guarantee high efficiency thermal exchange with low pressure drop. Finned unit coils are made of copper tubes and high exchange surface area aluminium fins. Coils are always tested for leaks with dried air at 14 bar;
Frame in galvanised steel insulated with self-extinguishing closed-cell polyethylene blanket of suitable thickness, to limit heat loss and noise to a minimum. Airflow grille in ABS built in the cassette, supplied in 1 cartonbox
Electrical power and control switchboard, complete with electronic air flow regulator and terminal board for connection to network and available remote controls;
Availability to have fresh air intake, distribute air flow in four directions and also in different room place thanks to air diffuser present on the unit;
Condensate auxiliary tray standard supplied;

Accessory

- Main coil 2-way/3-way valve unit
- Kit valves 4For2
- Fresh Air renewal connection
- Duct Connection Flange
- i-HB Power box
- Kit RS485 - interface for Building Management System

Commands

MTW wall mounted
Fan speed slider, mode slider (OFF/summer/winter). Thermostat with set point regulation. ON/OFF valve unit control (summer/winter for 2 pipes installation), ON/OFF second valve unit control (winter for 4 pipes installation). Room temperature probe. Remote water temperature probe.
ATW wall mounted
Mode button (OFF/summer/winter/AUTO), fan speed button (Max/Med/Min/AUTO). Thermostat with set point regulation. ON/OFF valve unit control (summer/winter for 2 and 4 pipes installation). Control of traditional or PWM modulating valve units. Room temperature probe and water temperature probe. Digital input configurable as: window contact, economy, heating or cooling remote changeover, periodic ventilation. Configuration dip switch. TTL serial port with Modbus protocol for installation in BMS.
EK plug-in control /EKW wall mounted control
User interface for selection of functioning mode (OFF/summer/winter/AUTO), fan speed (Max/Med/Min/AUTO), temperature set. Control of main and additional coil valve unit (summer/winter - 2 and 4 pipes installation) . Management of traditional ON/OFF valve unit or modulating valve unit 0-10V or 3 points . Air and water temperature probe. Multifunction digital input configurable by user. Configuration dip switch.
Modbus protocol for installation in BMS (e.g. Idrorelax system by Climaveneta). Installation and management of Master-Slave system up to 8 LIFE fan coil units.
Easy control installation thanks to 2 wires connection.
iK control with LCD screen
Interface with LCD screen with user-friendly icons. Control kit for universal installation: wall-mounted as well as plug-in. Selection of functioning mode (OFF/summer/winter/AUTO), fan speed (Max/Med/Min/AUTO), temperature set. Control iK could function manually or with weekly timer regulation configurable by the customer.
Control of main coil valve unit (summer/winter - 2 pipes) and additional coil (winter - 4 pipes). Management of traditional ON/OFF valve unit or modulating valve unit 0-10V or 3 points (supply 230 VAC or 24V) .
Parameters configurable directly by user. Modbus protocol for installation in Building Management System (e.g. Idrorelax system by Climaveneta). Installation and management of Master-Slave system up to 8 LIFE fan coil units.
Easy control installation thanks to 2 wires connection through HB power board

i-CHD			0706	1108	2209
ELECTRICAL DATA					
Power supply		V/ph/Hz	230/1/50	230/1/50	230/1/50
Max absorbd power		W	40	88	200
PERFORMANCE					
MAX SPEED					
Air flow		m³/h	810	1300	2100
Total capacity in cooling mode	(1)	kW	4,56	6,90	10,6
Sensible capacity in cooling mode	(1)	kW	3,17	5,06	8,11
Max water flow	(1)	m³/h	0,785	1,188	1,825
Mad pressure drop	(1)	kPa	36,4	30,9	42,0
Total capacity in heating mode	(2)	kW	5,42	8,21	12,9
Water flow in heating	(2)	m³/h	0,784	1,188	1,821
Pressure drop in heating	(2)	kPa	34,1	26,8	39,0
Noise Pressure	(3)	dB(A)	0	0	0
Noise Power	(4)	dB(A)	0	0	0
MED SPEED					
Air flow		m³/h	520	820	1380
Total capacity in cooling mode	(1)	kW	3,28	5,10	8,60
Sensible capacity in cooling mode	(1)	kW	2,30	3,85	7,10
Max water flow	(1)	m³/h	0,565	0,878	1,481
Mad pressure drop	(1)	kPa	19,8	17,9	28,3
Total capacity in heating mode	(2)	kW	3,75	5,63	9,17
Water flow in heating	(2)	m³/h	0,564	0,870	1,481
Pressure drop in heating	(2)	kPa	13,9	14,3	25,9
Noise Pressure	(3)	dB(A)	0	0	0
Noise Power	(4)	dB(A)	0	0	0
MIN SPEED					
Air flow		m³/h	200	360	820
Total capacity in cooling mode	(1)	kW	1,41	3,13	5,87
Sensible capacity in cooling mode	(1)	kW	1,11	2,52	4,84
Max water flow	(1)	m³/h	0,243	0,539	1,011
Mad pressure drop	(1)	kPa	4,2	7,4	13,8
Total capacity in heating mode	(2)	kW	1,63	2,83	5,93
Water flow in heating	(2)	m³/h	0,245	0,534	1,002
Pressure drop in heating	(2)	kPa	1,4	5,4	11,9
Noise Pressure	(3)	dB(A)	0	0	0
Noise Power	(4)	dB(A)	0	0	0
SIZE AND WEIGHT					
A	(5)	mm	575	730	830
B	(5)	mm	575	730	830
H	(5)	mm	250	290	290
Operating weight	(5)	kg	30	36	50

Notes:
1 Room temperature 27°C d.b./19°C w.b., Chilled water (in/out) 7/12°C
2 Room temperature 20°C d.b., hot water (in/out) 50/* °C (identical flow rate note 1)
3 Sound pressure in semianechoic room at 1 (m.) from fan front and 1 (m.) from the ground
4 Sound power on the basis of measurements made in compliance with Eurovent 8/2.
5 Unit in standard configuration/execution, without optional accessories.

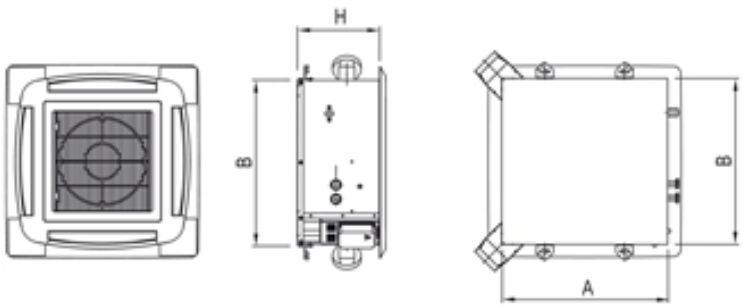

Hydronic terminals

HWD 0602 - 1104

Ducted type terminal 4,80-15,1 kW

HWD are Climaveneta ducted hydronic terminal units. The fan units at available working pressures, through internal insulation, ensure excellent acoustic comfort levels.
The compactness and ease of installation make HWD a suitable hydronic terminal unit for any type of setting.

Version

-	base version
E	electronic regulation version with remote control

Features

Unit coils guarantee high efficiency thermal exchange with low pressure drop. Finned unit coils are made of copper tubes and high exchange surface area aluminium fins. Coils are always tested for leaks with dried air at 14 bar;
The electrical power and control switchboard includes electronic air flow regulator and terminal blocks for connection to power supply and remote control;
Internal insulation in closed cell expanded polyethylene with suitable thick to limit heat loss and noise emission;
The fan units, with high available working pressures, are fitted with balanced impellers to guarantee maximum acoustic comfort.
Structure and base plate in hot-dip galvanised steel for maximum resistance to rust;
Extra modules available as accessories to the standard unit;
Remote control to manage main unit functions to provide a total enviroment comfort. Full Auto function;
Arrangement for electronic control of two on/off or modulating valve unit in the water circuit;

Accessory

- Interface SPB Kit
- Hot water coil kit
- Air purifier module with actived carbon filter
- Heating element module
- Humidifier module
- Delivery and intake plenum
- Delivery plenum for round ducts
- Two way intake plenum with air lock
- Condensate drain pump

Commands

NSW wall mounted
Fan speed slider, mode slider (OFF/summer/winter). ON/OFF valve unit control (summer/winter for 2 pipes installation), ON/OFF second valve unit control (winter for 4 pipes installation). Setting for minimum temperature thermostat.
PSW wall mounted
Fan speed slider, mode slider (OFF/summer/winter). ON/OFF valve unit control (summer/winter for 2 pipes installation), ON/OFF second valve unit control (winter for 4 pipes installation). Remote water temperature probe.
MTW wall mounted
Fan speed slider, mode slider (OFF/summer/winter). Thermostat with set point regulation. ON/OFF valve unit control (summer/winter for 2 pipes installation), ON/OFF second valve unit control (winter for 4 pipes installation). Room temperature probe. Remote water temperature probe.
ATW wall mounted
Mode button (OFF/summer/winter/AUTO), fan speed button (Max/Med/Min/AUTO). Thermostat with set point regulation. ON/OFF valve unit control (summer/winter for 2 and 4 pipes installation). Control of traditional or PWM modulating valve units. Room temperature probe and water temperature probe. Digital input configurable as: window contact, economy, heating or cooling remote changeover, periodic ventilation. Configuration dip switch. TTL serial port with Modbus protocol for installation in BMS.
PCE wall-mounted
Off/summer/winter/auto selector switch. Room temperature control. Room temperature sensor. Coil temperature sensor. Three speed air flow control + Auto. Automatic summer/winter switching. Automatic
ON/OFF valve control.

HWD - HWDE			0602	0703	0803	0904	1003	1104
ELECTRICAL DATA								
Power supply		V/ph/Hz	230-1-50	230-1-50	230-1-50	230-1-50	230-1-50	230-1-50
Max absorbd power		W	370	370	440	440	900	900
2 PIPES SYSTEM CONFIGURATION								
MAX SPEED								
Air flow		m³/h	1300	1300	1600	1600	2200	2500
Total capacity in cooling mode	(1)	kW	4,80	6,20	8,00	9,70	11,5	15,1
Sensible capacity in cooling mode	(1)	kW	3,00	4,00	5,20	6,50	7,40	10,2
Max water flow	(1)	m³/h	0,826	1,066	1,376	1,668	1,978	2,597
Mad pressure drop	(1)	kPa	12,0	8,0	14,0	35,0	24,0	23,0
Total capacity in heating mode	(2)	kW	6,61	8,48	11,8	12,1	16,7	18,7
Water flow in heating	(2)	m³/h	0,826	1,066	1,376	1,668	1,978	2,597
Pressure drop in heating	(2)	kPa	9,0	7,0	14,0	22,8	21,0	20,0
Noise Pressure	(3)	dB(A)						
Noise Power	(4)	dB(A)	68	68	72	72	78	80
MED SPEED								
Air flow		m³/h	1171	1171	1357	1357	1985	2243
Total capacity in cooling mode	(1)	kW	4,50	5,70	7,20	8,50	10,7	13,9
Sensible capacity in cooling mode	(1)	kW	2,80	3,70	4,60	5,90	6,90	9,70
Max water flow	(1)	m³/h	0,774	0,980	1,238	1,462	1,840	2,391
Mad pressure drop	(1)	kPa	11,0	7,0	11,0	27,0	22,0	21,0
Total capacity in heating mode	(2)	kW	6,19	7,88	9,34	10,6	13,7	16,8
Water flow in heating	(2)	m³/h	0,774	0,980	1,238	1,462	1,840	2,391
Pressure drop in heating	(2)	kPa	8,0	6,0	12,0	24,9	19,0	13,0
Noise Pressure	(3)	dB(A)						
Noise Power	(4)	dB(A)	65	65	69	69	76	77
MIN SPEED								
Air flow		m³/h	1021	1021	1057	1057	1585	1771
Total capacity in cooling mode	(1)	kW	4,10	5,20	6,00	7,00	9,10	11,7
Sensible capacity in cooling mode	(1)	kW	2,60	3,40	3,90	4,80	6,00	8,00
Max water flow	(1)	m³/h	0,705	0,894	1,032	1,204	1,565	2,012
Mad pressure drop	(1)	kPa	9,0	6,0	9,0	21,6	17,0	15,0
Total capacity in heating mode	(2)	kW	5,65	7,80	7,75	9,00	13,5	14,5
Water flow in heating	(2)	m³/h	0,705	0,894	1,032	1,204	1,565	2,012
Pressure drop in heating	(2)	kPa	8,0	5,0	7,0	18,7	9,0	13,0
Noise Pressure	(3)	dB(A)						
Noise Power	(4)	dB(A)	62	62	63	63	70	72
SIZE AND WEIGHT								
A	(5)	mm	900	900	1050	1050	1250	1250
B	(5)	mm	695	695	695	695	750	750
H	(5)	mm	295	295	295	295	315	315
Operating weight	(5)	kg	41	43	50	52	63	63

Notes:
1 Room temperature 27°C d.b./19°C w.b.; Chilled water (in/out) 7/12°C
2 Room temperature 20°C d.b.; Hot water (in/out) 50/* °C (with identical flow note1)
3 Sound pressure in semianechoic room at 1 (m.) from fan front and 1 (m.) from the ground
4 Sound power on the basis of measurements made in compliance with Eurovent 8/2.
5 Unit in standard configuration/execution, without optional accessories.

HWD - HWDE			602	703	803	904	1003	1104
ELECTRICAL DATA								
Power supply		V/ph/Hz	230-1-50	230-1-50	230-1-50	230-1-50	230-1-50	230-1-50
Max absorbd power		W	370	370	440	440	900	900
4 PIPES SYSTEM CONFIGURATION								
MAX SPEED								
Air flow		m³/h	1300	1300	1600	1600	2200	2500
Total capacity in cooling mode	(1)	kW	4,80	6,20	8,00	9,70	11,5	15,1
Sensible capacity in cooling mode	(1)	kW	3,00	4,00	5,20	6,50	7,40	10,2
Max water flow	(1)	m³/h	0,826	1,066	1,376	1,668	1,978	2,597
Mad pressure drop	(1)	kPa	12,0	8,0	14,0	35,5	24,0	23,0
Total capacity in heating mode	(2)	kW	9,10	9,10	11,8	11,8	16,7	18,0
Water flow in heating	(2)	m³/h	0,783	0,783	1,015	1,015	1,436	1,548
Pressure drop in heating	(2)	kPa	9,0	9,0	14,0	34,1	13,0	15,0
Noise Pressure	(3)	dB(A)						
Noise Power	(4)	dB(A)	68	68	72	72	78	80
MED SPEED								
Air flow		m³/h	1171	1171	1357	1357	1985	2243
Total capacity in cooling mode	(1)	kW	4,50	5,70	7,20	8,50	10,7	13,9
Sensible capacity in cooling mode	(1)	kW	2,80	3,70	4,60	5,90	6,90	9,70
Max water flow	(1)	m³/h	0,774	0,980	1,238	1,462	1,840	2,391
Mad pressure drop	(1)	kPa	11,0	7,0	11,0	27,3	22,0	21,0
Total capacity in heating mode	(2)	kW	8,60	8,60	10,6	10,6	15,6	16,8
Water flow in heating	(2)	m³/h	0,740	0,740	0,912	0,912	1,342	1,445
Pressure drop in heating	(2)	kPa	8,0	8,0	12,0	29,2	11,0	13,0
Noise Pressure	(3)	dB(A)						
Noise Power	(4)	dB(A)	65	65	69	69	76	77
MIN SPEED								
Air flow		m³/h	1021	1021	1057	1057	1585	1771
Total capacity in cooling mode	(1)	kW	4,10	5,20	6,00	7,00	9,10	11,7
Sensible capacity in cooling mode	(1)	kW	2,60	3,40	3,90	4,80	6,00	8,00
Max water flow	(1)	m³/h	0,705	0,894	1,032	1,204	1,565	2,012
Mad pressure drop	(1)	kPa	9,0	6,0	9,0	21,8	17,0	15,0
Total capacity in heating mode	(2)	kW	7,80	7,80	9,00	9,00	13,5	14,5
Water flow in heating	(2)	m³/h	0,671	0,671	0,774	0,774	1,161	1,247
Pressure drop in heating	(2)	kPa	7,0	7,0	9,0	21,9	9,0	10,0
Noise Pressure	(3)	dB(A)						
Noise Power	(4)	dB(A)	62	62	63	63	70	72
SIZE AND WEIGHT								
A	(5)	mm	900	900	1050	1050	1250	1250
B	(5)	mm	695	695	695	695	750	750
H	(5)	mm	295	295	295	295	315	315
Operating weight	(5)	kg	41	43	50	52	63	63

Notes:
1 Room temperature 27°C d.b./19°C w.b., Chilled water (in/out) 7/12°C
2 Room temperature 20°C d.b., hot water (in/out) 70/60°C
3 Sound pressure in semianechoic room at 1 (m.) from fan front and 1 (m.) from the ground
4 Sound power on the basis of measurements made in compliance with Eurovent 8/2.
5 Unit in standard configuration/execution, without optional accessories.

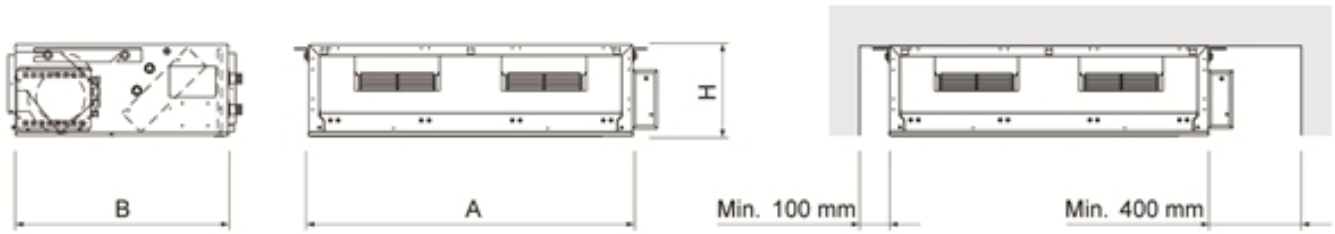

Hydronic terminals

HWD HP 0071 - 0121

Version

- base version

Features

Unit coils guarantee high efficiency thermal exchange with low pressure drop. Finned unit coils are made of copper tubes and high exchange surface area aluminium fins. Coils are always tested for leaks with dried air at 14 bar;

The electrical power and control switchboard includes electronic air flow regulator and terminal blocks for connection to power supply and remote control;

Internal insulation in closed cell expanded polyethylene with suitable thick to limit heat loss and noise emission;

Structure in galvanised steel of high thickness for maximum resistance to rust;

Extra modules available as accessories to the standard unit;

Accessory

- Interface SPB Kit
- Hot water coil kit
- Heating element module
- Delivery and intake plenum
- Intake grill
- Two way intake plenum with air lock
- Ceiling brackets
- Auxiliary condensate collecting tray

High head ducted type terminal 16,8-29,8 kW

HWD HP belongs to ducted type fan-coils high head of Climaveneta. The possibility of vertical or horizontal installation, airflow adjustment and attractive external panelling guarantees an ease installation and make the unit adaptable to any type of surroundings.

Commands

NSW wall mounted

Fan speed slider, mode slider (OFF/summer/winter). ON/OFF valve unit control (summer/winter for 2 pipes installation), ON/OFF second valve unit control (winter for 4 pipes installation). Setting for minimum temperature thermostat.

PSW wall mounted

Fan speed slider, mode slider (OFF/summer/winter). ON/OFF valve unit control (summer/winter for 2 pipes installation), ON/OFF second valve unit control (winter for 4 pipes installation). Remote water temperature probe.

MTW wall mounted

Fan speed slider, mode slider (OFF/summer/winter). Thermostat with set point regulation. ON/OFF valve unit control (summer/winter for 2 pipes installation), ON/OFF second valve unit control (winter for 4 pipes installation). Room temperature probe. Remote water temperature probe.

ATW wall mounted

Mode button (OFF/summer/winter/AUTO), fan speed button (Max/Med/Min/AUTO). Thermostat with set point regulation. ON/OFF valve unit control (summer/winter for 2 and 4 pipes installation). Control of traditional or PWM modulating valve units. Room temperature probe and water temperature probe. Digital input configurable as: window contact, economy, heating or cooling remote changeover, periodic ventilation. Configuration dip switch. TTL serial port with Modbus protocol for installation in BMS.

PCE wall-mounted

Off/summer/winter/auto selector switch. Room temperature control. Room temperature sensor. Coil temperature sensor. Three speed air flow control + Auto. Automatic summer/winter switching. Automatic
ON/OFF valve control.

HWD HP			071	091	101	121
ELECTRICAL DATA						
Power supply		V/ph/Hz	230V~50Hz	230V~50Hz	230V~50Hz	230V~50Hz
Max absorbd power		W	1	1	2	2
2 PIPES SYSTEM CONFIGURATION						
MAX SPEED						
Air flow		m³/h	3200	3200	4400	5000
Total capacity in cooling mode	(1)	kW	16,8	20,1	23,4	29,8
Sensible capacity in cooling mode	(1)	kW	12,3	14,4	17,3	21,7
Max water flow	(1)	m³/h	2,890	3,440	4,020	5,100
Mad pressure drop	(1)	kPa	24,0	22,0	14,0	11,9
Total capacity in heating mode	(2)	kW	16,3	19,6	23,0	29,8
Water flow in heating	(2)	m³/h	2,890	3,440	4,020	5,100
Pressure drop in heating	(2)	kPa	21,1	19,3	12,3	10,5
Noise Pressure	(3)	dB(A)	60	60	66	69
Noise Power	(4)	dB(A)				
SIZE AND WEIGHT						
A	(5)	mm	1300	1300	1500	1500
B	(5)	mm	1119	1119	1349	1349
H	(5)	mm	510	510	625	625
Operating weight	(5)	kg	121	124	145	149

Notes:
1 Room temperature 27°C d.b./19.5 °C w.b., Chilled water (in/out) 7/12°C
2 Room temperature 20°C d.b., hot water (in/out) 45/40°C
3 Sound pressure at 1 (m.) from fan front
4 Sound power on the basis of measurements made in compliance with Eurovent 8/2.
5 Unit in standard configuration/execution, without optional accessories.

HWD HP			0071	0091	0101	0121
ELECTRICAL DATA						
Power supply		V/ph/Hz	230V~50Hz	230V~50Hz	230V~50Hz	230V~50Hz
Max absorbd power		W	1	1	2	2
4 PIPES SYSTEM CONFIGURATION						
MAX SPEED						
Air flow		m³/h	3200	3200	4400	5000
Total capacity in cooling mode	(1)	kW	16,8	20,1	23,4	29,8
Sensible capacity in cooling mode	(1)	kW	12,3	14,4	17,3	21,7
Max water flow	(1)	m³/h	2,890	3,440	4,020	5,100
Mad pressure drop	(1)	kPa	24,0	22,0	14,0	11,9
Total capacity in heating mode	(2)	kW	25,0	25,0	36,0	39,0
Water flow in heating	(2)	m³/h	2,200	2,200	3,200	3,400
Pressure drop in heating	(2)	kPa	13,0	13,0	19,0	22,0
Noise Pressure	(3)	dB(A)	60	60	66	69
Noise Power	(4)	dB(A)				
SIZE AND WEIGHT						
A	(5)	mm	1300	1300	1500	1500
B	(5)	mm	1119	1119	1349	1349
H	(5)	mm	510	510	625	625
Operating weight	(5)	kg	121	124	145	149

Notes:
1 Room temperature 27°C d.b./19.5 °C w.b., Chilled water (in/out) 7/12°C
2 Room temperature 20°C d.b., hot water (in/out) 70/60°C
3 Sound pressure at 1 (m.) from fan front
4 Sound power on the basis of measurements made in compliance with Eurovent 8/2.
5 Unit in standard configuration/execution, without optional accessories.

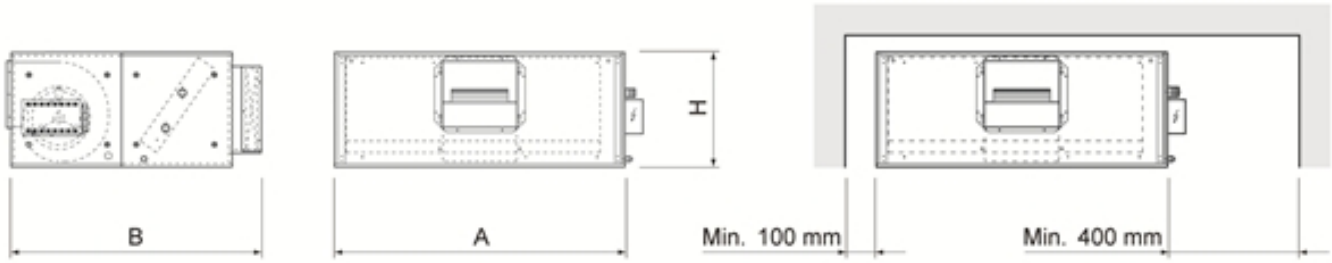

Hydronic terminals

HRD 0021 - 0151

Features

Removable aluzink plate side panels;
Panels insulated and soundproofed with polyethylene/polyester with average thickness of 10 mm (mod. HRD 0021-0051) and 20 mm for the other models;
High efficiency aluminium plate static type heat recovery units, with airflow separated by special seals;
UE3 efficiency air filters, which may be easily removed from any side of the unit (bottom, side, top) for periodic cleaning;
Fan casings on vibration-isolation mountings;
Double inlet centrifugal fans for fresh air intake and used air extraction, which may be removed from any side of the unit for periodic maintenance;
Multi speed directly coupled electric motor;
A terminal block with a relay board is fitted on the unit to aid electrical connections and fan control;
Stainless steel condensate collecting tray, with condensate drain directed downwards;

Accessory

- Interface SPB Kit
- Hot water coil kit
- Cool water coil kit
- Heating element kit

Heat recuperator unit

HRD heat recuperator units for residential and commercial application allow maximum room comfort and energy saving. In modern systems is becoming necessary to create forced ventilation, which involves air conditioned expelling; thereby consuming more energy and consequenting increasing costs. HRD heat recuperators have obviated such as problems using an aluminium static recovery unit that saves more than 50% energy, otherwise be lost with expelled stale air. HRD can be integrated in traditional systems with fan coils, chillers and radiators and may operate both in summer and winter. These units are recommended for suspended ceiling installation and may be suitably ducted to allow the fresh air intake and distribution.

Commands

NSW wall mounted
Fan speed slider, mode slider (OFF/summer/winter). ON/OFF valve unit control (summer/winter for 2 pipes installation), ON/OFF second valve unit control (winter for 4 pipes installation). Setting for minimum temperature thermostat.
MTW wall mounted
Fan speed slider, mode slider (OFF/summer/winter). Thermostat with set point regulation. ON/OFF valve unit control (summer/winter for 2 pipes installation), ON/OFF second valve unit control (winter for 4 pipes installation). Room temperature probe. Remote water temperature probe.
ATW wall mounted
Mode button (OFF/summer/winter/AUTO), fan speed button (Max/Med/Min/AUTO). Thermostat with set point regulation. ON/OFF valve unit control (summer/winter for 2 and 4 pipes installation). Control of traditional or PWM modulating valve units. Room temperature probe and water temperature probe. Digital input configurable as: window contact, economy, heating or cooling remote changeover, periodic ventilation. Configuration dip switch. TTL serial port with Modbus protocol for installation in BMS.
PCE wall-mounted
Off/summer/winter/auto selector switch. Room temperature control. Room temperature sensor. Coil temperature sensor. Three speed air flow control + Auto. Automatic summer/winter switching. Automatic
ON/OFF valve control.

HRD			021	031	051	071	091	101	121	151
ELECTRICAL DATA										
Power supply		V/ph/Hz	230V~50Hz	230V~50Hz	230V~50Hz	230V~50Hz	230V~50Hz	230V~50Hz	230V~50Hz	400V-3N~50Hz
Max absorbd power		W	90	130	294	700	700	700	1100	1500
PERFORMANCE										
MAX SPEED										
Air flow		m³/h	290	550	1000	1400	1900	2500	3200	4000
Available static pressure		Pa	60	65	90	140	120	110	170	170
Noise Pressure	(1)	dB(A)	53	54	54	60	58	58	61	62
Efficency	(2)	%	52,3	54,6	53,4	52,1	51,8	57,6	56,0	55,6
Recovery heat exchanger capacity	(2)	kW	1,34	2,57	4,60	6,20	8,40	12,30	15,30	19,40
Renewal air temperature	(2)	°C	8,10	8,70	8,30	8,00	7,90	9,40	9,00	8,90
SIZE AND WEIGHT										
A	(3)	mm	990	990	1150	1350	1450	1700	1700	1700
B	(3)	mm	750	750	860	900	900	1230	1230	1230
H	(3)	mm	270	270	385	410	470	490	530	630
Operating weight	(3)	kg	39	41	68	91	99	140	155	179

Notes:
1 Sound pressure at 1 (m.) from fan front
2 Size valued in the following Hypothesis: T inlet external air –5 °C; T ambient 20 °C ; nominal air capacity
3 Unit in standard configuration/execution, without optional accessories.

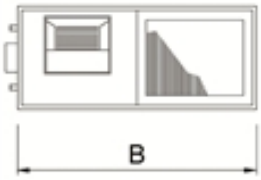

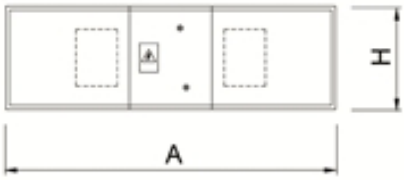

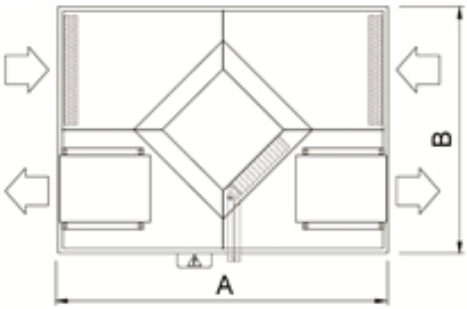

CLIMAVENETA
SUSTAINABLE COMFORT

Climaveneta S.p.A.
Via Sarson 57/c
36061 Bassano del Grappa (VI)
Italy
Tel +39 0424 509 500
Fax +39 0424 509 509
info@climaveneta.com
www.climaveneta.com

Climaveneta France
3, Village d'Entreprises
ZA de la Couronne des Prés
Avenue de la Mauldre
78680 Epône
France
Tel +33 (0)1 30 95 19 19
Fax +33 (0)1 30 95 18 18
info@climaveneta.fr
www.climaveneta.fr

Climaveneta Deutschland GmbH
Lyrenstraße 13
44866 Bochum
Germany
Tel +49 2327-95428-0
Fax +49 2327-95428-99
info@climaveneta.de
www.climaveneta.de

Climaveneta
España - Top Clima
Londres 67, 1° 4°
08036 Barcelona
Spain
Tel +34 934 195 600
Fax +34 934 195 602
topclima@topclima.com
www.climaveneta.com

Climaveneta Chat Union
Refrig. Equipment Co Ltd
88 Bai Yun Rd, Pudong Xinghuo
New dev. zone 201419 Shanghai
China
Tel 008 621 575 055 66
Fax 008 621 575 057 97

Climaveneta Polska Sp. z o.o.
Ul. Sienkiewicza 13A,
05-120 Legionowo,
Poland
Tel +48 22 766 34 55-57
Fax +48 22 784 39 09
info@climaveneta.pl
www.climaveneta.pl

Climaveneta
Climate Technologies (P) Ltd
#3487, 14th Main, HAL 2nd stage,
Indiranagar, Bangalore 560008
India
Tel:+91-80-42466900 - 949,
Fax: +91-80-25203540
sales@climaveneta.in

Climaveneta UK LTD
Highlands Road,
Shirley Solihull
West Midlands B90 4NL
Tel: +44 (0)871 663 0664
Fax: +44 (0)871 663 1664
Freephone: 0800 801 819
response@climaveneta.co.uk
www.climaveneta.co.uk

climaveneta.com

دامون سرویس (با مسئولیت محدود)
Damon Service Co. L.T.D
نماینده انحصاری کلایماونتا در ایران
تلفن: ۲۷۶۶۸ ، ۱-۲۲۰۹۳۲۵۰